This is a digital copy of a book that was preserved for generations on library shelves before it was carefully scanned by Google as part of a project to make the world's books discoverable online.

It has survived long enough for the copyright to expire and the book to enter the public domain. A public domain book is one that was never subject to copyright or whose legal copyright term has expired. Whether a book is in the public domain may vary country to country. Public domain books are our gateways to the past, representing a wealth of history, culture and knowledge that's often difficult to discover.

Marks, notations and other marginalia present in the original volume will appear in this file - a reminder of this book's long journey from the publisher to a library and finally to you.

Usage guidelines

Google is proud to partner with libraries to digitize public domain materials and make them widely accessible. Public domain books belong to the public and we are merely their custodians. Nevertheless, this work is expensive, so in order to keep providing this resource, we have taken steps to prevent abuse by commercial parties, including placing technical restrictions on automated querying.

We also ask that you:

+ *Make non-commercial use of the files* We designed Google Book Search for use by individuals, and we request that you use these files for personal, non-commercial purposes.
+ *Refrain from automated querying* Do not send automated queries of any sort to Google's system: If you are conducting research on machine translation, optical character recognition or other areas where access to a large amount of text is helpful, please contact us. We encourage the use of public domain materials for these purposes and may be able to help.
+ *Maintain attribution* The Google "watermark" you see on each file is essential for informing people about this project and helping them find additional materials through Google Book Search. Please do not remove it.
+ *Keep it legal* Whatever your use, remember that you are responsible for ensuring that what you are doing is legal. Do not assume that just because we believe a book is in the public domain for users in the United States, that the work is also in the public domain for users in other countries. Whether a book is still in copyright varies from country to country, and we can't offer guidance on whether any specific use of any specific book is allowed. Please do not assume that a book's appearance in Google Book Search means it can be used in any manner anywhere in the world. Copyright infringement liability can be quite severe.

About Google Book Search

Google's mission is to organize the world's information and to make it universally accessible and useful. Google Book Search helps readers discover the world's books while helping authors and publishers reach new audiences. You can search through the full text of this book on the web at `http://books.google.com/`

BRANNER
GEOLOGICAL LIBRARY

STANFORD UNIVERSITY LIBRARIES

On loc

California Dept

897

THE

MINING INSTITUTE

OF SCOTLAND.

TRANSACTIONS.

Vol. XIII.—1891-92.

HAMILTON:
PRINTED BY W. NAISMITH, CAMPBELL STREET.

MDCCCXCII.

Sn

622.C641
M665

CONTENTS OF VOLUME XIII.

General Meetings, . . . 5, 37, 63. 92, 181, 229, 263, 279, 290
Fourteenth Annual Meeting, 1891, ... 5
Council's Report, ... 5
List of Donations, ... 7
Financial Report, ... 7
Office-bearers, ... 9
New Members, . . . 9, 37, 63, 92, 181, 229, 263, 279, 290
President's Address, J. B. Atkinson, ... 10
Discussion of Mr Arnott's paper on
A Diamond Bore at Newton Colliery, ... 28
Discussion of Mr Robt Thos. Moore's paper on
Joseph Moore's Patent Hydraulic Pumping Arrangement, . 31, 38
Discussion of Mr Muirhead's paper on
The Ader Telephone, ... 36
Discussion of Mr Ashwin's paper on
The Pulsion Telephone, ... 36
My Experience in Working Kiltongue Coal Seams in Two Divisions, by
Dundas Simpson, ... 44
Discussion, ... 47, 64
A few Practical Notes on Pumping, by William Archibald, . . 48
Discussion, ... 58, 65, 182
Coal-Cutting Machinery at Westburn Colliery, by Robert Martin, . 76
Discussion, ... 79, 185, 230
Boring Machine for Tapping Wastes, by Robert M'Laren, . . . 81
Discussion, ... 83, 191
Summer Meeting—Visit to Manchester, ... 85
Manchester Ship Canal, ... 85, 177
Poynton Colliery, ... 89
Moston Colliery, ... 90
Colliery Hutches, Descriptions, with Plates, ... 93—176, 178
Hutch Wheels, by George A. Mitchell, ... 193
Discussion, ... 264, 280
Practical Application of Electricity to Mining Operations, by L. B. and
and C. W. Atkinson, ... 214
Discussion, ... 226, 234, 265, 280, 291
The Manufacture of Patent Fuel, by James Clark, . . . 236
Discussion, ... 240, 267, 282

A Visit to the Coal, Oil, and Anthracite Districts of Pennsylvania, by H. M. Cadell, ... 242
Discussion, ... 271
Bristol's Electric Safety Lamp, ... 275
A Reverse Fault in Kiltongue Coal at Drumshangie Colliery, by Robert M'Laren, ... 285
Discussion, ... 286, 295
Visit of Members to Glasgow Harbour Tunnel and Central Railway Works, ... 289
A New Use for Old Ropes, by Robert M'Laren, ... 299
Discussion, ... 304

CALIFORNIA STATE
Mining Bureau,
SAN FRANCISCO.

THE MINING INSTITUTE OF SCOTLAND.

FOURTEENTH ANNUAL MEETING,

HELD IN THE

HALL OF THE INSTITUTE, HAMILTON,

23rd April, 1891.

JOHN M. RONALDSON, Esq., President, in the Chair.

THE minutes of the last General Meeting were read by the Secretary, and confirmed.

COUNCIL'S REPORT.

The SECRETARY read the report of the Council, as follows :—

In submitting the Thirteenth Annual Report, the Council have a favourable account to give of the proceedings of the Institute for the past year.

The number of members has not only been maintained, but slightly increased.

There were on the roll at the beginning of the session,		503
Added during the year, ...		44
		547
Resigned, ...	10	
Died, ...	7	
Cut off on account of non-payment of Subscription, ...	25	
		42
Leaving, ...		505

Being a net increase of two.

There seems no good reason why the membership should not be considerably larger than it is; and it lies with the members to bring the claims and advantages of the Institute under the notice of those who are not yet connected with it.

Drawn, as the members are, from a wide district of country, it is not to be expected that a large proportion can attend the general meetings regularly; but the attendance during the year has been gratifying, and advantage has been taken to a considerable extent by members at a distance from the place of meeting of the opportunity of sending their contributions to the discussions by letter. This practice may be followed to a greater extent to advantage.

Some members desire that the places of meeting should not be confined to Hamilton and Glasgow. As an experiment, one general meeting was held in Edinburgh; and the Council were disposed to make trial of meetings in a few of the more important mining centres, and would commend this to the consideration of the new Council.

No work of outstanding importance has been undertaken by the Institute during the year; but the attention of the Council and of the Institute has been directed to the desirability of an investigation being made into the matter of Mine Drainage, with the view of affording information as to the best systems of pumping.

A collection of drawings and descriptions of the various kinds of hutches in use in Scotland is being made, and the Council rely on the members lending a hand in this matter, so as to make the collection as complete as possible.

The papers read during the year and printed in the Transactions are as follows:—

The Position of the Air Vessel on Large Drainage Pumps.
A New Long Distance Electric Bell.
Propping at Straiton and Pentland.
Working Thick Coal Seam by Longwall at Balgonie Colliery.
Meldrum's Forced Combustion Furnace.
Patent Metallic Packing for Piston Rods and Pump Plungers.
A System of Working Shale with a Tender Roof.
Shale Mining at Oakbank.
Diamond Boring at Newton Colliery.

Moore's Hydraulic Pumping Arrangement.
Ader Telephone.
Pulsion Telephone.

The usual annual excursion was to London. It was largely attended and much enjoyed. A visit was paid to the Exhibition of Mining and Metallurgy in the Crystal Palace.

The donations received during the year were as follows :—

Donor.	Donation.
W. N. Atkinson, ...	Report on Mossfield Colliery Explosion.
Thos. D. Weir, ...	Annuary of the United States of Venezuela.
John M. Ronaldson, ...	Report on Mossfield Colliery Explosion. Two copies.
	Report on Morfa Colliery Explosion, 1890.
	Report on Llanerch Colliery Explosion, 1890.
	Reports of Inspectors of Mines for 1889.
	List of Managers and Under-Managers holding Certificates of Service and Competency.
	List of Mines worked in 1889.
The Publisher, ...	Potts's Mining Register.
B. T. A. Bell, ...	The Canadian Mining Manual.
The Home Secretary, ..	Reports of the Inspectors of Mines for 1889. Two copies.
Robert M'Laren, ...	Inspectors' Reports for East Scotland for the Years 1887 and 1888.
Crosby, Lockwood & Son, ...	The Colliery Manager's Hand Book, by Caleb Pamely.

The usual additions by way of exchange have been made to the library, and a number of new volumes have been got by purchase. There are now in the library 1000 bound volumes, besides numerous pamphlets.

There have been ten meetings of Council during the year.

The President formally moved the adoption of the report, which was unanimously agreed to.

FINANCIAL REPORT.

The Secretary read the following abstract of the Treasurer's accounts for the past year, duly audited :—

ABSTRACT OF ACCOUNTS FOR SESSION 1890-91.

RECEIPTS.

To Balance, 1889-90,		£103	13	2
,, 176 Members' Subscriptions, at 21s,		184	16	0
,, 266 Do. do., 10s 6d,		139	13	0
,, 9 Do. do., Arrears, at 21s,		9	9	0
,, 12 Do. do., do., 10s 6d,		6	6	0
,, 1 Do. do., do., 10s,		0	10	0
,, 1 Do. do., do., 4s,		0	4	0
,, 2 Do. do., 1891-92, at 21s,		2	2	0
,, Cash received for Transactions, &c.,		22	15	11
,, Do. Rents of Hall,		12	14	0
,, Do. Advertisements,		12	12	0
,, Do. Interest,		3	18	5
	£498	13	6	

PAYMENTS.

By Printing and Stationery,	£156	14	8
,, Books, Maps, and Bookbinding,	10	8	8½
,, Rent of Halls,	15	11	0
,, Gas and Assessments,	3	1	10
,, Stamps and Carriages,	10	5	5½
,, Sundry Payments,	6	4	7
,, Bookcase,	7	6	0
,, Salaries,	94	12	0
,, Cleaning,	7	0	0
,, Balance in Bank,	187	9	3
	£498	13	6

April 2, 1891.—Examined, compared with vouchers, and found correct.

J. B. DALZELL, }
ARCHD. KERR, } AUDITORS.

The PRESIDENT commented on the favourable character of the report, and moved its adoption.

The motion was agreed to unanimously.

ELECTION OF OFFICE-BEARERS.

The PRESIDENT said that office-bearers were nominated by the Council at last meeting, and no one else having been proposed, no ballot was necessary. It now only remained for him to formally declare the office-bearers elected, viz. :—

President.

J. B. ATKINSON, 10 Foremount Terrace, Glasgow.

Vice-Presidents.

JAMES SMART, Balgreen, Hamilton.
JAMES HASTIE, Greenfield Colliery, Hamilton.
JAMES PRENTICE, Stanrigg Collieries, Airdrie.
GEORGE A. MITCHELL, 67 West Nile Street, Glasgow.

Councillors.

THOMAS ARNOTT, Clyde Cottage, Tollcross.
H. M. CADELL, Grange, Bo'ness.
ANDREW CROOKSTONE, Wemyss Colliery, Dysart.
JOHN DURIE, Elphingston Colliery, Tranent.
ALEXANDER FAULDS, Gateside Colliery, Cambuslang.
JAMES HAMILTON, 208 St. Vincent Street, Glasgow.
DOUGLAS JACKSON, Coltness Iron Works, Newmains.
ROBERT M'LAREN, Bonny, Uddingston.
D. M. MOWAT, Summerlee Iron Works, Coatbridge.
MICHAEL ROSS, Dechmont Colliery, Newton.
DAVID SMITH, Dalmellington Iron Works, Ayr.
WALLACE THORNEYCROFT, Merryton Colliery, Hamilton.

The following gentlemen were then elected by ballot as Ordinary Members :—

WILLIAM HYSLOP, Bank Colliery, New Cumnock.
ROBERT SCOULAR, Bank Colliery, New Cumnock.
DONALD BLACK, 97 Bath Street, Glasgow.
W. G. MORRISON, 59 St. Vincent Street, Glasgow.
GEORGE FRISKIN, Plan Colliery, Crosshouse.
ROBERT MILLAR, Turdees Colliery, Holytown.
ROBERT M. DONALDSON, Clyde Iron Works, Tollcross.
THOMAS BAYNE, Claremount, Lockerbie.
THOMAS ANDREW, Johannesburg.
ROBERT WILLIAM, Johannesburg.

THE NEW PRESIDENT.

The PRESIDENT, in vacating the chair in favour of Mr Atkinson, said he could assure them that during the three years he had been president it had been a very pleasant duty to preside over their meetings. His work had been rendered very easy, chiefly from the efficient aid he had received from the members of Council, and also from the forbearance with which he had been treated by the members of the Institute. Although Mr Atkinson had not been very long in Scotland, he was well known to most of them. He was a gentleman of great experience in English mining, and he was gaining experience in Scotch mining also. He could say this, that whatever he took in hand he did thoroughly, putting his whole heart into it; and when he occupied the chair, they would find him taking the same thorough interest in the affairs of the Institute as in other matters. He had much pleasure in vacating the chair in favour of Mr Atkinson.

The newly-elected PRESIDENT took the chair, and, on behalf of the office-bearers and himself, he thanked the members for having elected them, and he trusted that during his term of office the Institute might be as prosperous as it had been in the past.

Mr J. S. DIXON proposed that they should give Mr Ronaldson a hearty vote of thanks for his past services. Before vacating the chair, Mr Ronaldson had made light of the work he had done for the Institute; but, from his own experience as a former president, he might say it entailed a great deal of attention, and Mr Ronaldson had certainly given them the benefit of his experience, and had devoted a great deal of his time to their interests during the last three years. (Applause.)

Mr RONALDSON returned thanks, stating he was certainly very much obliged to them for their vote of thanks.

THE PRESIDENT'S ADDRESS.

GENTLEMEN,—I beg to thank you for the great honour you have conferred upon me in electing me as your President for the ensuing year. I think you could have made a much better choice; but, in deference to the wish of the Council, I allowed my name to be put forward, and you have been

good enough to elect me. As you are aware, my connection with the Institute is of recent date, and, while this fact makes the honour you have done me the greater, it does not permit me to discuss the work and future prospects of the Institute with the freedom of a member of longer standing. The contents of the twelve volumes of your transactions are sufficient evidence of activity and usefulness in the past, and I see no reason to suppose that the results will, in the future, be less satisfactory. This Institute has geographically a larger field of operations than any other Mining Institute in the kingdom; but, unfortunately, it has no well defined centre or point at which to hold meetings, such as all institutions of the kind require, and this is a source of weakness which must be guarded against. The reading of papers on questions of pure mine engineering before meetings of the National Association of Colliery Managers is another source of danger, not only to this Institute, but to all Mining Institutes. The Association I refer to is a very necessary one; but I think it will be unfortunate if it leaves the pursuit of its legitimate objects and trenches upon ground belonging to Mining Institutes. With these prefatory observations, I will now pass to the subject of Mine Engineering.

It has been said that the only power man has over matter is to move it from one place to another. The business of the mining engineer is to extract mineral from the earth by undergound operations and place it on the surface. In doing this he has to carry with him, in the face of great difficulties, conditions similar to some of those existing above ground, in order to render the life and work of the miner possible.

Quarrying is the extraction of minerals from the earth by surface operations, and differs from mining in respect that there is no cover overhead, and that the use of artificial light is not essential.

The operations of mining may conveniently be considered under the following general heads, on each of which I propose to offer a few remarks, and mention some recent improvements, and consider the possibility of further advances.

(1) Detaching the mineral from its native bed,

CALIFORNIA STATE

(2) Carriage of the mineral to the surface.
(3) Ventilating the mine.
(4) Modes of dealing with water.
(5) Lighting the mine.
(6) Maintaining the roads of the mine.
(7) Ingress and egress of workmen.

(1) *Detaching the mineral from its native bed.*—In attacking the mineral of value, and such adjacent rock as it is necessary to remove, the agents employed, either alone or in conjunction, are (1) manual labour, aided by the use of simple tools, such as picks, wedges, and pinches; (2) explosives; and (3) machines actuated by manual power, steam, and water—the power derived from steam being transmitted by compressed air or electricity. A very large quantity of coal is worked entirely by manual power using simple tools, and I am inclined to think that the greater depths at which coal will be worked in the future, and the extension of the long wall system, will together result in the pressure of the overlying strata increasing the ease with which many coal seams may be wrought by manual labour only.

The desire to produce larger coal may, however, be sufficient to lead to the introduction of coal cutting machines, even in cases where weight for weight of coal produced, there may be no economy as compared with manual labour.

Explosive agents are of great value in mining. We have in them vast force in a small compass, and so capable of application for the rending of mineral in the confined space of a drill hole. Their use in the case of mines where fire-damp and coal-dust exist is governed by considerations of safety. Where these inflammable bodies occur the use of an explosive giving off flame is dangerous, and this it is proposed to meet either by employing what are called "high" explosives, such as gelatine dynamite, in conjunction with some material to kill the flame, or by using a flameless explosive, as to the existence of which latter class I must confess I have doubts. Roburite, an explosive said not to give off flame, has been used in Scotland, and some experiments were made with it by a committee of the Institute; but I would invite members having had later experience of it to favour this Institute with a communication on the subject.

A large number of new explosives have been brought before the public of recent years, and it would be impossible in the limits of an address of this kind even to mention their names, much less to discuss their merits, were I able to do so. They all, I believe, require detonation, and differ in this respect from gunpowder.

It was long ago proposed to force down mineral by confining in a drill hole unslaked lime, pumping in water, and utilising the increase in volume of the slaked lime and the steam pressure developed by the heat attending the slaking, as forces to dislodge the mineral. This method has been tried recently on a considerable scale and with some success, but does not seem to be gaining ground. A committee of the Institute reported on the matter some years ago. It has also been proposed to confine in iron cylinders highly-compressed air, and by placing these cylinders in a drill hole and fracturing them, release a pressure sufficient to force down the mineral. Proposals for developing pressure in the confined space of a drill hole by the action of sulphuric acid on zinc filings have also been put forward.

Machines for doing the work usually performed by the miner or effected by the use of an explosive are as follows :—

Machines for holing or shearing.
Machines for boring out the whole passage.
Machines for dislodging mineral already holed.
Machines for boring holes for the use of explosives or for the application of machines for dislodging mineral.

The prime movers employed in actuating these machines are manual power, steam and water power; compressed air and electricity being the transmitting agents.

No machine actuated by manual power has, so far as I am aware, ever been successfully employed for holing or shearing coal. Mr William Brown, a colliery viewer in Northumberland, devised a machine of this kind, which was known as "Willie Brown's Iron Man," but it never came into use, and I am unacquainted with the details. A most useful class of machines, worked by hand, and only brought into general use a few years ago, are now employed for boring holes for the use of explosives. In

these machines the drill has a rotary motion, and works efficiently in coal and shale and their associated strata, and even in limestone. For hard rocks a similar machine, in which the drill has a percussive motion, has been contrived. Manual labour acting through a machine has also of recent years been applied as a substitute for explosives with some measure of success. A large hole is bored in coal or even stone, and the machine inserted; pressure is then applied to the sides of the drill hole by manual power, acting through suitable mechanical arrangements.

One at least of these machines is described in your Transactions.

At Scremerston Colliery in Northumberland, the miners in the Cooper Eye Seam, which contains a thick band or midstone are each provided with a screw jack for pushing back from the working face into the waste behind large blocks of the band.

The direct application of steam to machines acting on the mineral is not generally admissible but the power of steam engines transmitted by compressed air or electricity is now applied to machines for holing the coal, for boring out the whole passage and for drilling holes for the use of explosives.

Coal cutting machines driven by compressed air are now in use at the following collieries in Scotland:—Springbank, Gartness, Fence, and Westburn in Lanark; Whitehill in Edinburgh; Penstone in Haddington; Alloa in Clackmannan; and Trabboch in Ayrshire.

The cutting part of all these machines, with the exception of that at Alloa, consists of a disc furnished with cutters.

At Alloa, Harrison's Mining Machine has been in use for 7 years for holing coal. It is simply a chisel attached to the continuation of the piston rod of an air cylinder, and may be called a slotting machine. A description of this machine and its working at Alloa appears in the Transactions.

Coal cutting machines of other types have been and are being used. About the year 1870 I saw a pick machine working at Elemore Colliery in Durham, and recently a machine actuating a revolving bar, furnished with cutters, has been tried at a colliery in Durham; this type of cutter is probably the best, and is that adopted in coal cutting machines worked by electricity, and at present in use

at collieries in Yorkshire. This machine (Legg's) was exhibited at your Mining Exhibition in Glasgow, in 1886.

I am not aware if Baird's machine is now working. In this machine an endless chain furnished with cutters was revolved round the end of a lever projecting into the cut.

At Hamilton Palace Collieries one of Stanley's heading machines is at work, driven by compressed air. This machine bores out the whole passage, and is employed more to open out a field than as a machine for getting coal.

Compressed air and a head of water are both used for actuating machines for boring holes for the use of explosives.

Machines driven by steam engines for boring holes for proving mineral are used, and this principle has been extended to the sinking of shafts through wet measures as in the Kind Chaudron system.

(2) *The carriage of the mineral to the surface* is effected by manual power, horse power, gravity, and by machines actuated by manual power, horse power, steam and water. The power of steam being transmitted in some cases to secondary engines by means of compressed air and electricity.

In mines entered by levels, manual power alone is sufficient to convey the mineral to the surface, but usually other means are required. Manual power acting on a winch is used to raise mineral up short dips or shafts. Horse power is generally employed in flat workings and in the levels of inclined measures. At many of the Hamilton collieries where the coal is thick and the measures flat, a horse goes right to the face; in Durham and Northumberland where the seams also lie flat, but are not usually so thick as about Hamilton, small ponies do all the drawing near the face. Horses, acting in gins, are not much used in Scotland, but in the north of England they are often used both for raising coal up short dooks in large collieries and up shafts at small landsale pits.

Where the measures are inclined, gravity, either by spouts or self-acting inclines and drop pits, assists in the carriage of the mineral. In places going to the rise and where the inclination exceeds 20° to 30°, the mineral will descend to the levels of its own gravity. This mode is only applicable in cases where size of

mineral is no object. It is in general use in the oil shale mines, and, where the dip is not sufficient for the mineral to slide on the natural floor, a bottom of deals or iron sheets is laid down.

On self-acting inclines the mineral is conveyed in hutches running on their own wheels, or where the inclination is very steep carriages are sometimes used in which the hutches are placed. The cut chain system on self-acting inclines has been described in your Transactions. In this system several levels send down hutches from different points of the same incline.

The stationary steam engine placed on the surface or near the bottom of the shaft, and acting directly (or indirectly by power transmitted by compressed air or electricity to secondary engines) on ropes and chains, is much used for the haulage of coal on permanent roads in mines.

The secondary engines referred to are in some cases of the locomotive type, such as Lishmans & Young's locomotive (reported on in an early volume of the Transactions), actuated by stored compressed air. At Wharncliffe Silkstone Colliery, an electric locomotive carrying its power in secondary or storage batteries has been used. Mr Clark, of Ormiston Colliery in Haddington, is fitting up an electrical plant designed to lead 100 tons of coal per day for a distance of 600 yards against an inclination of 1 in 91. In this case the locomotive obtains its current from overhead wires.

Great strides have been made in recent years in methods of rope haulage. The simplest form is where the empty hutches take the rope into a dipping mine. When power has to be applied both for taking the empty hutches in and bringing the loaded hutches out, the main and tail rope system, or the endless rope or chain, is used. The main and tail rope system is not increasing in favour, the easier rate of speed of the endless rope causing it to be more adopted. The endless rope, however, requires two roads, unless pass byes are provided, or only one rope is used at once for hauling.

At Bent Colliery, near Hamilton, a system of rope haulage is in use, in which an endless rope describes a circuit inside the working faces, commencing at and returning to the shaft. The empty hutches travel inward along one part of the route and are replaced

at different points by loaded hutches, which traverse the remainder of the circuit on the road to the shaft. A somewhat similar system of haulage was tried at Allanton Colliery about 15 years ago.

At Whitehaven Colliery, on a long haulage road under the sea, a steam engine hauls the full hutches to the shaft, bringing with them a rope from a compressed air engine at the inner end of the road, which hauls the empty hutches into the mine.

In a few cases in Scotland, ropes from a steam engine on the surface have been taken down boreholes to draw mineral up a dook commencing at some distance from the shaft. This was done at Drumoyne, near Govan, 25 years ago. A description of such an arrangement would be a valuable addition to your Transactions.

In America, boreholes are used as passages for ropes and steam, and as rising mains for water.

Steam locomotives have never, so far as I am aware, been used in mines in this country, but it appears from your Transactions that in some American mines they are employed.

The directions in which further advances may be expected in the haulage of coal are (1st) the application of electricity as a transmitting force to stationary engines situated some distance from the shaft; and (2nd) the application of electricity to drive locomotives.

I think some improvement might be effected in the carriage of coal along the faces of thin seams worked longwall so as to save the brushing of so many roads. It is usual in such cases to have a road for every 10 or 15 yards of face, the life of most of these roads is short, while the brushing of them costs perhaps 6s per yard. Slipes or small hutches, with or without wheels, and holding 2 or 3 cwts. of coal, are used in many cases to convey the coal along the face to the roadhead. If some ready plan could be devised to carry the coal, say 50 yards, in a height of from 2ft. downwards, the cost of the brushing of many roads would be saved.

The form of hutches employed is governed by the height of the seam and roads, the inclination of the seam and the mode of haulage used. They are of endless variety and carry from 6 to 20 cwt.

A very curious adaptation of hutches to a condition of the mine may be seen at Niddrie Colliery, where the measures lie at a very high angle. The hutches are built with the sides inclined so as to be parallel with the sides of the levels.

The Institute is now collecting information on the subject of hutches, and I hope many members will render assistance.

It has been proposed to adapt grease boxes to hutches, and this has been tried at several collieries in England.

The raising of the coal up shafts is not a matter in which any important change has taken place since the introduction of slides and cages, nor does there seem to be much room for further improvement. The counterbalancing of winding engines may be attained in a more efficient manner than has yet been accomplished.

In the north of England considerable attention has recently been given to automatic loading and unloading of the cages, and some saving has resulted.

(3) *Ventilating the mine.*—In the production of a current of air in mines mechanical ventilators are steadily replacing the furnace and almost all mines require the use of the one or the other. The application of the steam jet or waterfall is usually only a temporary expedient.

Much ingenuity has been brought to bear on the invention of mechanical ventilators, which may be divided into two classes—the pump or varying capacity machine and the centrifugal ventilator.

The drawbacks to the former class are that in some of them, such as those of Struvé and Nixon, which are simply air pumps, a reciprocating motion and valves are necessary. In others of the same class, such as the rotary pumps of Lemielle and Cooke, these objectionable features are largely overcome, but mechanical difficulties still exist which seriously interfere with the economical working of the machines.

Centrifugal fans, such as the Guibal, Waddle, Schiele, and many others, are of simple construction, the moving part of all being single. There has been a tendency of late years to use centrifugal fans of a smaller diameter but running at a higher speed. The shafts of many of the larger Guibal fans have broken.

The pumps or varying capacity ventilator should give a higher useful effect than the centrifugal fans, but whether the mechanical difficulties inherent to the former class can ever be overcome so as to enable them to compete sucessfully with the simpler centrifugal forms may be doubted.

Fans are usually placed at the top of the upcast shaft and exhaust air from the mine. I have, however, met with several cases in Scotland where the fan forces air down the downcast.

Hand fans are often used for ventilating stone mines. The miners in such cases are principally engaged at the face, and so long as no fire-damp is met with no great objection can be taken to the practice. After firing shots the fan is revolved at a higher speed to drive away the powder smoke from the face. It has been proposed to extend the system to larger fans, driven by compressed air or electricity, and I believe it has been tried at Ryhope Colliery in Durham, and Fence Colliery in Lanark, and at some others. Continental mining engineers criticise our system of ventilation somewhat severely, and contend that of the large quantities of air circulating in our mines only a small proportion reaches the working face. It is possible that subsidiary fans might enable each district to secure its full complement of air at the face, but I do not think a good general system of ventilation induced by a fan on the surface can be improved upon.

In conducting the air current to the face of single places the use of non-inflammable brattice cloth, both as a precaution against fire and to prevent its extension, is to be recommended. I have seen cases where the brattice cloth had evidently carried a fire from the face rapidly back into the main air course and led to serious results, whereas the extension of the fire by the solid coal would have been more gradual. Sheet iron pipes are sometimes used in place of brattice. They have the advantage of being non-inflammable, and their use does not seem objectionable, provided their sectional area is sufficiently large; but the risk of their throttling the ventilation should be borne in mind.

After the Mauricewood disaster in September, 1889, which was caused by smoke and heated air from a fire in the return air-way flowing through a rhone and past a door into the intake air-way,

contrary to the usual direction, I made some enquiry as to the feasibility of providing rhones with a valve, allowing a flow of air in one direction only. Such valves are commonly fixed in chimneys and used in the ventilation of rooms, and I obtained particulars of similar valves in use at East Holywell Colliery in Northumberland. This colliery has two shafts working the Yard seam and passing through the exhausted High Main seam. At the High Main seam a scale of air leaves the downcast shaft and passes to the upcast. On one occasion a sudden and rapid fall of the barometer was accompanied by an issue of black damp from the High Main waste in such volume as to overcome the ventilating pressure and pass into the downcast shaft, descending with the air to the Yard seam below, where it extinguished a number of lights. To prevent a recurrence of this, and also to prevent air from the upcast passing into the High Main waste on a rise of the barometer, valves were fitted in an opening in a door at the downcast shaft and in a rhone leading into the upcast. These openings are a foot square, and the valves are of sheet iron, $\frac{1}{16}''$ thick, hung from the top: the valve next the downcast opens from the shaft, and that at the upcast opens to the shaft. Their action is as follows:—With a steady barometer both valves are open, and air passes from the downcast into the upcast. With a rapidly falling barometer the valve next the downcast closes, and black damp flows into the upcast. With a rapidly rising barometer the valve next the upcast closes, and fresh air from the downcast flows into the High Main waste.

(4) *Modes of dealing with water.*—All mines, with the exception of those worked entirely by levels from the surface, would soon fill with water were it not removed. Its removal is effected by gravity, by water chests and by pumps actuated by manual power, horse power, water power, and by steam or naphtha engines: the power of steam being transmitted to the pump by ropes, rods, compressed air, columns of water, and electricity. It is fortunate that the quantity of water does not increase with the depth. Many deep collieries are nearly free from water. Water in shaft sinking is a source of much difficulty, and, as already stated, has led to the boring out of the shaft by machinery instead of employing sinkers; the shaft, after passing through the water

bearing measures, and before the removal of any water, being lined with tubbing. This method was adopted at Marsden Colliery in Durham, where, previous to its introduction, 12,000 gallons of water per minute were being pumped.

Soft watery measures have been successfully sunk through after freezing the ground to be pierced by the Poetsch system.

In small quantities water can be raised from sinking shafts in kettles, and in order to save time in filling the kettle Mr W. Galloway has used a cylindrical tank exhausted of air, and which fills itself. The exhaustion of the tank is effected by connecting it at the bottom of the shaft with pipes proceeding from an old boiler on the surface exhausted of air. With this arrangement 5000 gallons of water per hour were dealt with at Llanbradach Colliery in Wales. The usual mode of applying the steam engine to raise water in sinking pits is by wooden spears and pipes, but an engine supplied with steam from the surface placed on a platform a short distance above the bottom of the shaft and lowered as the sinking proceeds has been used.

The raising of water up shafts after they have been completed is effected by chesting, by pumps of the ordinary type using wooden or iron spears, by force pumps driven by steam engines placed at the bottom of the shaft and supplied with steam brought in pipes from the surface or from boilers underground, and by force pumps actuated by columns of water, as in Moore's pump. The power applied is still occasionally derived from a water wheel. Of recent years many collieries, both in Scotland and England, have adopted force pumps placed at the bottom of the shaft for dealing with water. In such cases it is very necessary to have some days' lodgment room.

Before the application of the steam engine to pumping, long water levels were often driven for unwatering mines.

Water met with in rise workings flows by gravity to the shaft, gravity in the form of a syphon is often applied to remove water over rising ground to a lower level, boreholes are put down from an upper to a lower seam to enable water to flow to points where means of dealing with it exist.

In dip workings the removal of water is effected by chesting, by pumps worked by manual and horse power,

by steam and naphtha engines; occasionally a head of water in a shaft is made use of to work an hydraulic engine which throws the feeder, and the water passing through the power cylinder, to the bottom of the shaft; I have seen Korting's water elevator used under these conditions. The steam engine is often placed at the pump, steam being conveyed to it in pipes, or even in rare cases the boiler being also placed there. The use of steam at a distance from the shaft is not to be recommended. Power for actuating pumps in dip workings is usually transmitted by ropes, spears, compressed air, columns of water, and electricity.

The Moore's pump, in which power is transmitted from a steam engine, on the surface or at the bottom of the shaft, by columns of water, is an admirable arrangement for dook pumping, and if not replaced by electricity its use will probably extend. The latest results of the working of these pumps in Scotland have just been published in the Transactions. I noticed recently that a machine for rolling steel pipes has been brought into use. Power pipes for Moore's pump might be rolled by it.

Naphtha or petroleum engines have been successfully applied for dealing with small quantities of water, and in one case, in the county of Durham, the power so developed is also made use of for hauling purposes. Two naphtha engines are working underground pumps in Scotland, and one of them was described in a recent volume of the Transactions.

The employment of naphtha for actuating engines in the workings of a mine has advantages similar to what are derived from the use of explosives; in both cases the source of power in a small compass is carried into the mine to the place where it is required.

Although not directly bearing on the subject, I will describe here the use of fire-damp in the place of coal for firing a boiler at a colliery in Durham.

From Hebburn Colliery, situated in the south bank of the Tyne and in the county of Durham, coal is worked in the county of Northumberland by passages under the river to its north side; in the workings in the Low Main seam in Northumberland a feeder of water and gas was met with

and dammed off, the gas was led in pipes under the river and to the surface at the Hebburn pit, where it was used in firing a double-tubed Lancashire boiler. The gas burned in the tubes with a white flame, except near the edges where it was blue. Air was admitted through openings one foot square in each tube. I never measured the quantity of gas, but I was informed that it amounted to about 240 cubic feet per minute. I measured the air passing into the tubes of the boiler, and found it to be 2,356 cubic feet per minute, or the quantity required to support the combustion of one-tenth of the quantity of fire-damp.

Feeders of water, both in shafts and in the workings, are often dammed back. In shafts, this is effected by a lining of cast-iron tubbing, or where the pressure is not great, a lining of bricks set in cement. Cast-iron tubbing is not often used in Scotland, where the conditions requiring its use do not exist to the same extent as in the eastern part of the county of Durham, where the coal measures are overlaid by the magnesian limestone containing much water, and followed by a bed of soft running sand.

In ordinary passages dams are usually built of bricks and cement, of wood, or of wood and clay. The description of a few dams would be a useful record for your Transactions.

When workings are approaching drowned wastes, it is often necessary to tap the water and run it off by degrees; this is effected by advance boreholes. Mr Andrew Hunter, of Alloa Collieries, has contrived a boring machine for this purpose, which consists of a hollow rotary drill, screwed into ½in. and ¾in. malleable iron pipe. The machine for actuating the drill is set on a small bogie, placed at the inclination of the bore, and weighted so as to keep the drill forward; water from a small force pump attached to the machine is forced through the pipes for cleaning the hole. I am informed that two men, with a third man to give them a rest, can bore forty yards in eight hours, and that a hole over fifty yards long has been bored by the machine.

(5) *Lighting the mine.*—The darkness of our mines would have been as easily overcome as we overcome the darkness of the night, were it not for the presence of inflammable gases.

The number of safety lamps of the ordinary type, in which the flame of the lamp is supported by the air of the mine, is very

large. It would be interesting to have a list compiled from the Records of the Patent Office of all such lamps. The object aimed at is to allow air to pass into the lamp to support the flame, to allow the products of combustion to escape, and yet prevent flame under any probable conditions passing to the outside when in an inflammable mixture of fire-damp and air. It is quite unnecessary for me to say that the Scotch gauze lamp, now I hope entirely extinct, does not fulfil these conditions, nor do many other types, such as the Davy and Clanny lamps.

The incandescent electric lamp can be adapted to supply an almost perfectly safe light for mines, so far as igniting gas is concerned, and the only objection to it on the score of safety is that it is too independent of the outside atmosphere, and does not afford any indication, like the safety lamps of the ordinary type, of the presence of either fire-damp or black-damp.

Assuming experience shows that no great danger will result from the use of a lamp giving no indication of the state of the air, or that this difficulty is overcome by some addition to the lamp to afford this information, then I think there can be little doubt as to the ultimate use of portable electric lamps in fiery mines.

The main roads near the shafts are now, as at Earnock Colliery, near Hamilton, and at several English collieries, lit by the incandescent electric lamp, supplied with electricity by wires from a dynamo. In English collieries it is very common to light the shaft bottom with ordinary lighting gas, and this is done at Fence Colliery in Scotland.

It is curious how districts cling to one class of lights. In Durham and Northumberland, in naked light collieries nothing but the candle stuck in a lump of clay is seen; while in Scotland, under similar conditions, the tin oil or tallow lamp is used. The objection to the Scotch lamp is the amount of smoke it gives off, which in a badly ventilated place accentuates the discomfort, but it is certainly in many respects handier than the candle.

(6) *Maintaining the roads of the mine.*—The working places of a mine and the roads and shafts require to be maintained in an efficient state for the safety of the miner and for the purposes already discussed.

In the working places and roads there is always a cover overhead and a tendency for the roof and sides to fall; this tendency may be confined to small masses of mineral set free by the presence of lipes, false bedding, &c., or there may be a general crush in which in addition to the roof and sides giving way the floor rises. This latter state of things is often caused by the workings of the mine being improperly laid out; there are, however, some seams in which the enclosing strata are so soft that there is always a difficulty in keeping the roads open.

Without going into the important question of the general laying out of the workings of a mine which is governed by natural conditions, such as the inclination of the bed, nature of the seam and its enclosing strata, liability to spontaneous combustion, by questions of subsidence, and by the considerations discussed under heads already mentioned, a few remarks will be made on the supporting of roads and working places.

In some beds passages requiring no support may be driven; usually, however, some artificial means is necessary, and for this purpose timber, brick arching, and stones from the brushing are employed. The use of iron or steel supports is of very limited but increasing application. Old rails are sometimes used as crowns for supporting main roads; cast iron props and girders are also used, but cast iron is too rigid a substance. It appears that on main roads there may be an ultimate economy in the use of iron or steel supports. In some continental mines their use is very common, and they are being tried to a small extent in Scotland. Columns of sand, kept in place by a light casing, have, I believe, been used as a roof support.

Dry rot is a great enemy to timber in mines, and in order to meet the evil creosoted timber is often used, and Mr H. Aitken of Falkirk proposes to impregnate timber with common salt, and secure two objects—its preservation, and to render it non-inflammable.

(7) *Ingress and egress of workmen.*—In most mines the shafts and roads used for the carriage of the mineral are used for this purpose; it not unfrequently happens that a return air-way is also used as a travelling road. In vertical shafts or highly inclined roads ladders are sometimes employed. In coal mines it is not usual

to employ separate machinery for raising and lowering workmen, but this is done in some metalliferous mines in England, where the winding arrangements are of a rude type, by means of a man engine. In the single man engine a moving spear in a vertical or inclined shaft is provided with platforms about 10ft. apart; in the shaft by the side of the spear similar stationary platforms are placed. The spear has a stroke equal to the distance the platforms are apart. A miner ascending, steps upon a platform on the spear before the up stroke, and is raised to the first stationary platform, upon which he steps, and waits until the down stroke is made, when he steps upon the second platform on the spear and is raised to the second stationary platform, and so on till he arrives at the surface. In the double man engine two moving spears are employed, one making the upstroke while the other makes the down stroke, and the miner steps from one to the other. In Cornwall and Devon five of these machines are now in use. It is employed at some continental coal mines, and it has even been proposed to use it for bringing up coal hutches.

The transmission of power by electricity would appear to be the new thing in mining. Some knowledge of electricity will be required of the colliery managers of the future.

In Scotland, at Arniston and Newbattle Collieries and Hermand Mines, pumps driven by electricity are now at work, and plants for the application of electricity to coal cutting and haulage are in the course of erection elsewhere.

In a paper on electric mining machinery read this year before the Institution of Civil Engineers, Messrs L. B. & C. W. Atkinson discuss the application of electricity to mining purposes at some length, and shortly their conclusions are as follows:—Electrical power is destined to become an important factor in mining, on account of its ready application to machines requiring to be constantly moved, and on account of its economy in first cost and cost of maintenance as compared with any other mode of transmitting power. They also claim that the danger resulting from sparking in an explosive atmosphere can be overcome. They consider the application of electricity to pumping, coal-cutting, and drilling holes for the use of explosives, but do not go into the question of electric haulage.

With regard to the danger arising from sparking, there are many mines where this does not apply. The Messrs Atkinson have enclosed the parts of the motor liable to spark in an air-tight casing, and, as an additional precaution, they propose to attach to the motor a steel cylinder containing carbonic acid gas under pressure, or liquefied, and allow a slow but constant stream of it to flow into the casing so as to destroy the inflammability of any mixture of fire-damp and air that might be inside it. The danger from sparking of the switches connected with the motor is also considered by the Messrs Atkinson.

Messrs Davis & Stokes, of Derby, have introduced a safety commutator for electric dynamos and motors in coal mines, in which they claim to have overcome the danger of sparking by so enclosing the dangerous parts that they become equivalent to a locked safety lamp.

The subjects I have briefly glanced at have been, as we have seen, more or less dealt with in your Transactions, but they still furnish material for a large number of papers. The preparing of the mineral for the market is an important matter that comes within the scope of the colliery manager, and on this subject you have had the excellent report of the Coal-Cleaning Committee.

I wish particularly to refer to the dearth of papers in your Transactions on the geological structure, the occurrence of economic minerals, and the co-relation of the coal seams in the different mineral fields of Scotland; a stranger coming to the district naturally turns to your Transactions for information on these heads, and I think he should not be disappointed.

In conclusion, I would urge upon all members of the Institute the propriety of contributing in some way to its Transactions, either by papers or by taking part in the discussions, verbally or by correspondence. A large part of the discussion on papers read before the Institution of Civil Engineers is contributed in writing, and this mode of giving additional information or criticising information already given is most useful.

Mr J. S. Dixon said, having occupied the presidential chair, he thought he might say, without being invidious, that they had listened that night to probably the most comprehensive address of any president since the institute was started. (Applause.) He

thought Mr Atkinson had touched on almost every point that could be raised in mining. He had given them a great deal of information, and he thought they had every reason to be proud of their present President, and to thank him very heartily for the very excellent and comprehensive address he had given them that evening. (Applause.)

The PRESIDENT said he was much obliged to them for the kind way in which they had received the address.

MR FAULDS'S PAPER ON "SHALE MINING AT OAKBANK."

Further discussion was invited on this paper, and none being forthcoming, it was declared closed, and Mr Faulds thanked for his contribution.

DISCUSSION OF MR ARNOTT'S PAPER ON "A DIAMOND BORE AT NEWTON COLLIERY."

The SECRETARY said he had a note from Mr Arnott, who was from home, stating he was sorry he could not be at the meeting, and explaining that he would be glad to answer any questions afterwards.

Mr J. S. DIXON said he did not wish to say anything in particular about the paper, but to exhibit one of the cores which came from this bore, and which showed the very minute manner in which the strata was shewn. Holding up the core, Mr Dixon pointed out how clearly a "slip" of some two inches was shewn, and he added that he had much pleasure in presenting the core to the Institute. Continuing, he said he thought Mr Arnott's paper very minutely described the process of boring by this method, and that they were all at one in agreeing that this

and the old chisel system were not to be compared. Mr Atkinson had asked the proportion of coal got from the bore. He was not prepared to say what the proportion was, but it was very large. He would say two-thirds of the whole had been brought out in pieces varying from the size of a pea to the size of a man's fist. It was a most satisfactory sample of the coal got.

Mr W. S. RUSSELL, referring to Mr Atkinson's question as to how the core was gripped, produced this portion of the borer and gave a practical illustration of the matter to the meeting.

Mr DIXON said one peculiarity of the Newton bore was that none of the debris from the boring came to the surface. It disappeared into the fissures of the rock. The water also got away underground.

Mr THORNEYCROFT asked whether, when the core was caught and drawn up, the direction of the dip and rise was correctly shown, or did the core revolve?

Mr JAS. PRENTICE said there would be no difficulty in arriving at the dip and rise of the strata from the core if a special arrangement were made. As he understood, a small part of the core would be left fixed in the bottom,—four or five inches. It would be quite easy to put down a tool to catch the fixed portion. The only difficulty would be in keeping an exact direction on the rods when unscrewing. He did not suppose it had ever been done, but it was quite practicable.

The PRESIDENT said the dip had been taken by lowering a magnetic compass and fixing it to a core; after that was done they fixed the needle and drew the core up with the compass attached. They thereby arrived at the exact direction of the dip of the strata.

Mr DIXON thought the desired end might be accomplished by lowering clay or plaster of Paris in the way described, if they could guarantee that it could be brought up plumb.

Mr PRENTICE said they would require to depend on the stratification of the core for the direction of dip and rise.

Mr RUSSELL said, with a core of that description, the dip and rise would hardly be obtainable. The bottom part was always turning round and round, and as it came up at the break it gave no indication of the direction.

Mr DIXON said the piece of core produced showed the dip and rise. They did not know from it the direction, but they knew the exact rate of dip.

Mr PRENTICE said they must find the direction of dip and rise from the fixed portion of the core at the bottom.

Mr R. T. MOORE said he had seen the description of a method for finding the inclination of the bore-hole by putting down a compass and photographing the bearing of the needle while it was down in the hole. There was a glass vessel containing an etching liquid, and the inclination of the surface of the liquid gave the inclination of the bore-hole.

The PRESIDENT said that was another difficulty. The core might have come from an inclined bore-hole, and unless it was certain it was plumb the cores might be misleading. It had been found that bores put down by percussion had gone off at an angle of 30 or 40 degrees.

Mr DIXON said he had known of samples of chisel boring being off the plumb.

Mr RONALDSON referred to a bore-hole at Kilmarnock, 150 fathoms deep, where there were beautiful specimens of core, there being 20 fathoms of whin passed through. He forgot the speed they went at, but the whin was so hard the diamonds actually polished the whin before they got through it. He did not suppose an ordinary chisel bore would have passed through it. They really made small progress, but they managed to get through it.

Mr ROBERT M'LAREN mentioned a recent bore put down by James Nimmo & Co., which was found to be off the plumb, and had to be abandoned. In reference to the cores, he saw one at Broxburn of soft rock, 9ft. long, grooved all the way down. In sinking further, they came on the Broxburn marl, of a very hard nature, and it was, as Mr Ronaldson described, as if it had been polished.

Mr PRENTICE said, in the same bore Mr Ronaldson referred to, the strata got so soft that the diamond crown made a screw, and screwed itself in until it was fast and stuck. They bored so quickly the diamonds did not clear themselves, and it took about two months to clear them.

Mr DIXON said as a general principle the harder the material

the quicker the bore up to a moderate hardness. For one thing, this system gave a good sample of the material cut through. He was certain there had been thousands of pounds lost in searching for ironstone and shale when they did not know where they were. He knew of two examples within two miles of Hamilton where the Ell coal, 7 feet thick, was bored through and missed. The one was described as 5 feet of black blaes and 2 feet of coal, and the other as 4 feet odds of foul coal, but in working into them the coal was found to be the best in the district.

The PRESIDENT declared the discussion closed, and moved a vote of thanks to Mr Arnott for his paper, which was heartily accorded.

DISCUSSION OF MR MOORE'S PAPER ON "JOSEPH MOORE'S PATENT HYDRAULIC PUMPING ARRANGEMENT."

The PRESIDENT said there were a number of these pumps working in the district. Could none of the members give information as to how they were doing?

Mr M'LAREN said in the Eastern District there were a number in operation, and, taking an unbiassed view of them, he could not but say they were working satisfactorily. Some years ago, there was one which was amongst the first erected, and, on asking the manager of the mine how it was working, he said it was a useless pump. But the fact was he knew nothing about it, and, having got the apparatus put right, it had been working satisfactorily for five years. Water is said to be incompressible; but this pump in practice, with a great pressure, shews that it is not so, as often the stroke of the pump underground is less than the stroke on surface, due to compression. Perhaps Mr Moore might say what is the ratio of compression, with a given pressure, on the pump.

Mr RONALDSON said it was proved by Mr Moore's description

on p. 171 that water was compressible to a certain extent, or else the pipes expanded. The capacity of one power ram was as 12½ to 27 of the other.

Mr DIXON—But there were four of the one and two of the other.

Mr RONALDSON said of course they all knew water was not absolutely incompressible. There was one of these pumps—Mr Moore would know more about it than he did—put up in Ayrshire. It was at the bottom of a long dook, and the intention was not only to pump the water from the bottom of the dook to the pit bottom, but to force it a good many fathoms up the shaft, where there was a lodgment, but they found it would not work that way. It was beyond its capacity. It would pump the water to the pit bottom, and that satisfactorily; and, he thought, this went to prove that this system had its limits. He thought it would be found that for very long dooks and very high lifts there was a limit beyond which it was not possible to work. They could easily understand that, because with a long length of pipe with a thousand pounds pressure, these pipes were certain to yield a little, and it would soon come to a point where the water compressed and the pipes expanded, using up all the capacity of the power pump on the surface. However, he did not mean to run down the pump. He believed it was a very good pump. He had seen many examples, and in almost every case had heard the pump spoken very highly of. In comparing pumping by electricity with his pump, Mr Moore said the efficiency with electricity was 44·4 per cent. Now, he held in his hand a paper by the Messrs Atkinson, in which they named 67 per cent. of useful effect from electricity. If that were the case, Mr Moore's pump and electricity were six and half-a-dozen. With the electricity there were two pumps, and they were not by any means toys—in one case the distance between the engine on the surface and the pump below being 3800 yards, and in the other 1800 yards. Indeed, he thought when it came to a very long distance Mr Moore's pump would have no chance with the electric pump. For moderate distances it might be more efficient, but where it went to such great lengths he

imagined if what was stated was correct, the electrical pump was the more economical of the two.

Mr GEO. A. MITCHELL asked if it was possible to work two pumps below ground with one pair of plungers on the surface, and if there was any arrangement made to take air out of the water? If there was much air in the water the compression would cause a great deal of the stroke to be lost.

Mr HASTIE said that, in describing Mr Nimmo's pump, it would have been useful if Mr Moore had stated how much coal was consumed, because in his description of the Mauricewood pump Mr Love showed a saving of 292 tons of coal per month, or 3504 tons in the year, which at 5s a ton was a saving of £876 a year. That was a large sum. If Mr Moore could give the amount of coal consumed with Mr Nimmo's pump, that would show to the members what it was saving in both systems.

Mr MOORE said he would do that on a future occasion. It had not yet been running long enough.

The SECRETARY said it would be well if Mr Moore would state the places where the pumps were in use, so that members might have an opportunity of informing themselves as to their efficiency under various circumstances.

Mr DIXON said Mr Moore might also state the size of the pumps in the different places.

Mr FAULDS said he had lately visited one of the pumps and he was very much taken up with it. It was doing its duty very effectively, but he would like to know the consumption of coal.

Mr MOORE, with regard to the compression of the water mentioned by Mr M'Laren, said, as they all knew, water decreased slightly in bulk under pressure. The figures in the text books were that it diminished $\frac{1}{23000}$ of its bulk for every atmosphere of pressure. They found that to be very nearly correct in working with the pumps. In addition to this there was the expansion of the pipe. At a pressure of 1000 lbs. per square inch, the two together caused a shortening of about $\frac{1}{300}$ of the length of pipes. The length of stroke of the underground pump was the length of stroke of the top power rams, less the compression in the pipes; and as the area of the power rams was

three times that of the pipes, the loss of stroke was $\frac{1}{900}$ of the length of pipes. Thus, with 900 feet of power pipes, a 4 feet stroke on the surface would be a 3 feet stroke of the pump. Of course a 4 feet stroke could be got by making the top power rams with a 5 feet stroke, or a proportionately larger area, and this was usually done. There was loss of stroke with wooden or any other kind of pump rods. In regard to the length of pipes, he quite agreed that for long distances it would be better to use electricity or some form of hydraulic engine, where the water would be running continuously in one direction through the pipes; but he thought for a distance of a mile this pump was quite suitable, and it possessed the advantage over the hydraulic engine, that there were no valves to keep in order. As to electricity, the figures given in his paper were taken from a description of a pump at Normanton Colliery. He had not seen Messrs Atkinson's paper. They had put up one or two arrangements where one set of surface power rams drove two sets of pumps, but they preferred to have a separate set for each pump. Air in the water was let off by means of cocks placed at the highest points of the power pipes. The saving of fuel at Maurice-wood was certainly very great—much larger than he would have expected himself—and while it showed what a good pump it was, it also showed, perhaps more clearly, what a very bad thing it was to take steam down a pit. After all, it depended on the engine as to what quantity of fuel was used. With regard to the details which Mr Barrowman wanted, he should be glad to supply a list of the pumps in operation, and the size of them. (See next page.)

The discussion was adjourned.

LIST OF SOME OF JOSEPH MOORE'S PATENT HYDRAULIC PUMPS NOW IN OPERATION.

Owners.	Name of Mine.		Diam.	Stroke.	Vertical Head.	Dist'nce from Surface.	
			Inches.	Feet.	Fms.	Fms.	
Clippens Oil Co.,	Pentland, Loanhead,	Double-acting,	10	4	100	200	
Thomas Spowart & Co.,	Dunfermline,	,,	8	3	50	200	
,, ,,	,,	,,	6	3	50	150	
William Dixon, Ltd.,	Calder,	,,	6	3	50	400	
Lanemark Coal Co.,	New Cumnock,	,,	6	3	50	300	
Dalmeny Oil Co., Ltd.,	Dalmeny,	,,	10	4	108	300	Vertical Shaft.
Merry & Cuninghame,	North Motherwell,	,,	8	4	120	120	
Fife Coal Co., Ltd.,	Leven, Fife,	,,	10	4	60	200	
,, ,,	Pirnie,	,,	10	4	50	250	Vertical Shaft.
Springbank Coal Co.,	Airdrie,	,,	12	4	60	60	
John Galloway & Co.,	Trabboch Colliery, Ayr,	,,	4	3	80	600	
Glenboig Fireclay Co.,	Glenboig,	,,	5	2	20	100	
Hermand Oil Co.,	West Calder,	,,	6	3	60	150	
,, ,,	,,	,,	6	1½	60	150	
George Taylor & Co.,	Annbank, Ayr,	,,	8	3	80	200	Vertical Shaft.
Calderbank Steel and Coal Co., Ltd.,	Tannochside,	,,	10	4	120	120	
,, ,, ,,	,,	,,	8	4	50	300	
Climpy Coal Co.,	Climpy,	,,	8	3	30	200	
Shotts Iron Co.,	Mauricewood,	,,	10	4	60	160	
,, ,,	,,	,,	8	4	60	280	
John Nimmo & Son,	Slamannan,	,,	12	4	70	70	Vertical Shaft.
,, ,,	,,	,,	12	4	70	70	
Bowman & Co.,	Buckhaven,	,,	14	5	100	300	
Earl of Rosslyn,	Dysart,	,,	12	4	60	200	
Linlithgow Oil Co.,	Linlithgow,	,,	12	4	85	290	

DISCUSSION OF MR MUIRHEAD'S PAPER ON THE "ADER TELEPHONE."

Mr MUIRHEAD said since last meeting they had connected Gateside Colliery with the Flemington Coal Company's Glasgow office.

Mr FAULDS, as to the way it was working, said sometimes it was not doing very well. Sometimes there was a great sounding noise, but he understood this was due to the railway telegraph wires, and probably some other telephone companies were trying to boycott Mr Muirhead.

Mr MUIRHEAD said this could be obviated by a double wire. They were working only with half their system till the end of July, when the patent expired. That was the instrument that was working from London to Marseilles, but in the meantime they were only using part of it.

On the motion of the PRESIDENT, Mr Muirhead was accorded a vote of thanks.

DISCUSSION OF MR ASHWIN'S PAPER ON THE "PULSION TELEPHONE."

Mr ASHWIN said since last meeting they had put down two lines from a pit top to the bottom, one at Parkhead, Motherwell, and the other at Niddrie Colliery.

The PRESIDENT—Do they work satisfactorily?

Mr ASHWIN—Yes, they have given great satisfaction.

Mr FAULDS said at last meeting they had an example of this telephone, but he thought it was in a straight line. He would like to know what effect taking it round curves or corners would have.

Mr ASHWIN said there were two right angles on the lines shewn at last meeting. The angles made no alteration in working the telephone. They had to have angles on all lines.

The PRESIDENT—Does it not lessen the volume of sound?

Mr ASHWIN—Of course, we take care not to put up any unnecessary angles on the wire, and to round off the angles. After a little practice, it hardly makes any difference.

The PRESIDENT moved a vote of thanks to Mr Ashwin, which was duly accorded.

CALIFORNIA STATE
Mining Bureau,
SAN FRANCISCO.

THE MINING INSTITUTE OF SCOTLAND.

GENERAL MEETING,

HELD IN THE

ROOMS OF THE CHRISTIAN INSTITUTE, GLASGOW,

27th May, 1891.

J. B. ATKINSON, Esq., President, in the Chair.

The minutes of the last General Meeting were read by the Secretary and confirmed.

The following were elected by ballot as ordinary members :—

JOHN KEIRS, Garrochhill Colliery, Coylton, Ayr.
JAMES PENN, Crosby and Gilcruix Collieries, Maryport.
JOHN STEEL, Ellenborough Colliery, Maryport.
WILLIAM SEMPLE, Crosby and Gilcruix Collieries, Maryport.
WILLIAM C. LYNN, Hermand Oil Works, West Calder.
ALEX. WILLIAMSON, Deans, Bathgate.
THOS. P. MARTIN, Allhallows Colliery, Mealsgate, Carlisle.
WILLIAM HILL, Pennyvenie Colliery, Dalmellington.
WILLIAM WELSH, Pennyvenie Colliery, Dalmellington.
THOMAS WALKER, Drumpellier Colliery, Coatbridge.
WILLIAM ELLIS, Seafield Works, Bathgate.
HUGH GRAY, Livingstone Terrace, Uddingston.
SAMUEL ANDERSON, Stand Colliery, Airdrie.
COLIN CAMPBELL, Carron Works, Larbert.
JAMES FREW, 75 Bath Street, Glasgow.
THOMAS JAMIESON, Oakbank, Mid-Calder.

The following discussion then took place :—

DISCUSSION OF MR ROBERT THOMAS MOORE'S PAPER ON "JOSEPH MOORE'S PATENT HYDRAULIC PUMPING ARRANGEMENT."

The PRESIDENT said if any gentlemen had had experience of the working of the pump, they would be glad to hear them. He supposed the list that had been given simply applied to Scotland. There would be pumps abroad and in England?

Mr MOORE replied in the affirmative.

The SECRETARY said he expected to have had a communication from Mr F. J. Rowan, who was disposed to criticise Mr Moore's statement as to the small degree of efficiency by electricity, as he was satisfied, and he (Mr Barrowman) thought it was stated in a paper of Mr Rowan's (Vol. xi., p. 18) that the efficiency was higher than represented by Mr Moore. However, he understood Mr Rowan was in London, and probably had not got the "Transactions" in time to send a communication that night.

Mr A. M. GRANT said he supposed where Mr Moore gave the comparison between electricity and compressed air the arrangement at Mauricewood was referred to? He understood the engine there was a compound engine.

Mr MOORE—No; it is a high pressure non-condensing engine.

Mr GRANT said he should have thought, if Mr Moore had given the capacity of the engine, he would have found a much better comparison as regarded electricity. He quite agreed it gave better results than did compressed air or electricity so far as they had gone. The pump at Mauricewood was working the three ordinary pumps and two power pipes; or they might say practically one set of power pipes. There was another thing he might say. Mr Moore said the power rams were made of such a size that the pressure of the power pipes at Mauricewood was a thousand pounds to the square inch. He would like to know if the pressure at the ram at Balquhatston Colliery was less or more than a thousand pounds to the square inch.

Mr MOORE said that, when the pump was working, the pressure was more than a thousand pounds. The power ram was made of such a size that a thousand pounds on it would balance the head

on the pump when everything was standing. There was an additional pressure due to shocks and friction, and the total pressure was generally considerably more than a thousand pounds. He thought it would be very interesting to get the diagrams from Balquhatston, and he would lay them before the Institute on some future occasion. He was sorry the Moresby pump had been omitted from the list. It was very interesting, and the length of power pipes (a mile and a half) showed the distance to which the system might be applied. Regarding his statement as to electricity, which had aroused so much criticism the only paper he had was one describing the pump at Normanton. That was the latest information he had.

Mr GRANT said this paper was a most valuable one in view of the discussion that took place in Edinburgh, and the proposal by Mr Durie in regard to pumping; and, if Mr Moore could see his way to give them more details as to his various installations, both with regard to diagram of engines and pumps, it would be very useful. He might also give the size of the valves, outlets of the valves, and the rising column. All those points had got to do with the duty of pumping, as they were all well aware; and, he thought, the only thing wrong with the paper was that it was too general. If they could possibly see their way to adjourn the discussion so as to enable them to have further details, it would be a most valuable addition to their contributions. If they had got the details of Mauricewood and Balquhatston, he thought the result would have been more favourable to hydraulic pumping than to electricity and compressed air. His experience in connection with the fitting up of this class of pumping, which had been quite as extensive as Mr Moore's, corroborated his figures as to a high pressure engine. In fact, he was rather under as compared with some of the installations they had put in. If Mr Moore was agreeable, he would do the best he could to get particulars of the installations they had put down.

Mr MOORE said the economy of a pump—that was to say, the amount of coal burned for the amount of water raised—depended on the class of engine and boilers used. What he had in view in giving the details of the Mauricewood pump was to show the percentage of useful effect by the system, and

to show the amount of loss in the power rams and pipes. That was irrespective of the class of engine used. With a compound engine there would no doubt be a saving of fuel. The reason for adopting two pumps at Balquhatston was to get a duplicate arrangement and balance the engine. It was a better balanced arrangement than one set of power rams working two sets of pumps.

Mr GRANT said a hydraulic pump as it stood was perfectly balanced without being put at right angles. It was accordingly quite useless to multiply the balancing power, and that was what Mr Moore had done. Referring to the percentage of duty given, Mr Grant expressed the opinion that it must have been calculated from the diagram of the steam engine.

Mr MOORE said that he quite saw Mr Grant's contention that a direct pumping engine was perfectly balanced, but a geared engine was different. The engine at Mauricewood was geared 5 to 1; consequently each stroke of the pump represented five strokes of the engine. Each stroke of the engine represented the same amount of work, and moved the geared wheel the same distance. The distance moved by the pump for each stroke of the engine was different for each part of the stroke. Thus, during the first stroke of the engine the pump travelled 0·32 feet, and did 8 per cent. of the work of a full stroke.

During the	2nd	stroke	0·89 feet,	doing	22¼	per cent.	of the work.
,,	3rd	,,	1·23	,,	30¾	,,	,,
,,	4th	,,	1·10	,,	27½	,,	,,
,,	5th	,,	0·46	,,	11½	,,	,,

It would thus be seen that during the first two and the last two strokes there was an excess of power in the engine, and unless something was done to take up this excess the speed was increased at these points, and shocks caused. This action might be observed with any geared engine. If there were two sets of pumps at right angles, as at Mauricewood and Balquhatston, the one was moving quickly while the other was moving slowly, and the strain on the engine was nearly balanced.

Mr GRANT said he entirely differed from Mr Moore. If they had even an ordinary bell crank pumping engine, it was equal.

The principal claim of a hydraulic system of pumping was, when started, that the effect on the engine was always constant, and that the stroke was equally balanced.

Mr JOHN DURIE said he thought it would be of great importance if Mr Moore would give the same particulars with regard to Balquhatston pump as he had given regarding that at Mauricewood. So far as he could gather, at Balquhatston the pumps were situated at the bottom of the pit, and the engines driving them were at the top. Usually they had the power conveyed by means of the ordinary system of pump rods, whereas at Balquhatston a column of water was employed for this purpose, and it would be important to know the relative efficiencies. This information had been given in regard to Mauricewood, and the only thing that struck him about it was the very small amount of the power swallowed up in driving the engine and gearing the power rams on the surface, viz., 10 per cent. That seemed very small, although, knowing the scientific attainments of Mr Moore, he did not doubt his figures, although it was surprising that only 10 per cent. of the power was required for this purpose. He thought this paper was a very important contribution to the subject he urged on the Institute at their Edinburgh meeting. It formed one branch of the subject he was anxious that they should take in hand and investigate. It would also be important to obtain any statistics available as to the relative efficiency of ordinary hydraulic pumps and those with alternate back and forward strokes, like the Moore pump. At present there was so much controversy about the relative merits of compressed air, electricity, and hydraulic transmission, he thought this paper was a valuable contribution, and if the information he desiderated was obtained in regard to Balquhatston, it would add somewhat to the value of it. He quite saw Mr Moore's point in answer to Mr Grant. He was only bringing out the relative efficiency of his system of hydraulic transmission, and was not dealing with steam engine efficiency. He differed from Mr Grant on the subject. He did not think the kind of engine mattered very much.

Mr GRANT said he thought Mr Durie had misunderstood him, because he quite understood the engine efficiency had nothing to

do with the efficiency of the pump. At the same time, he only brought out the fact that, if Mr Moore had worked out the combined engine it would have been more in favour of the Moore pump.

Mr DURIE said there was a point he had omitted, viz., the effect the stretching or expanding of the pipes had on the shortening of the stroke. Mr Mitchell alluded to the effect of air in shortening the stroke. He thought air would have more effect in shortening the stroke than even the expansion of the pipes and it was important, therefore, that air should be entirely excluded. The expansion and contraction did not, in his opinion, much affect the economy. It was entirely confined to the Moore system of transmitting power, and did not occur in other hydraulic systems, where the pipes once expanded would remain so as long as the high pressure at which the column was flowing continued.

Mr GRANT said with regard to what Mr Durie had mentioned he did not quite admit what he said as to this matter of air. There was no doubt air had a very bad effect in the working of this system of pumping. Unless they got a feeding column and kept solid water they might have a 5ft. stroke on the surface. But, if they had air in their pipes, no matter how small the quantity, it gave trouble and shortened the stroke below. The great thing was to have a good job from start to finish—good pipes and pump and good intakes, and with solid water they could go for a year, while their stroke would barely vary an inch.

The PRESIDENT said they had heard a very interesting discussion. He had much pleasure in proposing a hearty vote of thanks to Mr Moore, and he hoped he would give them further details as to the points that had been raised.

The motion was agreed to, and the discussion closed.

The following communication was afterwards sent by Mr Moore:—Since the discussion, I have had an opportunity of seeing Messrs Atkinson's paper on Electric Mining Machinery,* and I find that the figure of 67 per cent., quoted by Mr Ronald-

* Paper No. 2497, read before Institution of Civil Engineers (London), 3rd February, 1891.

son as the efficiency of electrical transmission of power, is the proportion which the work got out of the motor at the pump bears to the work put into the dynamo at the engine, and does not take into account (as was done in the figures given for the pumps at Mauricewood and Pentland) the friction of the engine or of the pump. In the results detailed in Messrs Atkinson's paper, the efficiency of the pump varied from 35 to 49·6 per cent. of the brake horse power of the engine. This, again, takes no account of the friction of the engine, and if this were allowed for, the efficiency would be still lower than these figures. In reply to some comments on the efficiency, in the discussion, some details are given of another electrical pumping plant (the place where it is erected is not stated), where the work done by the pump was 49 per cent. of the indicated horse power of the steam engine. This, which is the best result mentioned, is better than the 44·4 per cent. got at Normanton † (a result also quoted by Messrs Atkinson), but is still much inferior to the 68 per cent. got by the hydraulic pump.

† Paper read by Mr A. Snell, Associate M. Inst. C.E., before the National Association of Colliery Managers, 28th September, 1889.

The following paper on "My Experience in Working Kiltongue Coal Seams in Two Divisions," by Mr Dundas Simpson, was then read by the Secretary :—

MY EXPERIENCE IN WORKING KILTONGUE COAL SEAMS IN TWO DIVISIONS.

By Dundas Simpson.

The mode of working described in this paper has not, so far as I am aware, been adopted elsewhere; and it is hoped that this account of my experience, together with the methods employed, may be of use to others who have a similar seam to deal with.

The Kiltongue coal in the Bredisholm Estate, and in other estates some miles eastwards, is all in one seam. It varies very much both in quality and thickness. Where it is thin, it is of the best quality for household purposes. I have wrought this seam from 2 feet 4 inches to 7 feet in thickness, with only 6 inches of stone in it—a stone resembling gas coal, but of no value. This stone was 3 feet from the bottom of the coal. In the Bredisholm fields it varies very much. A section of the whole seam is as follows:—

Coal,	...	...	13 inches.
Stone,	...	...	3½ ,,
Coal,	...	...	12 ,,
Stone,	...	...	17 ,,
Coal,	...	...	34 ,,

The occurrence of the two beds of stone in the seam makes it necessary that great care be taken to keep the coal clean and in proper condition for the market. This seam is 170 fathoms from the surface, and 46 fathoms under the Splint coal, has an inclination of 1 in 8, and is wrought on the stoop-and-room principle. The place more particularly referred to in the following description is on the same estate, but further to the rise, and at a depth of 112 fathoms. The pit was put down in the belief that the seam would be found in a similar state to that in the other pits, but after the coal was reached, it was found to be in two divisions, with 16 feet of black blaes between the top and bottom coal. The bottom coal was 2 feet 8 inches thick, of a superior quality, with a strong pavement. Levels and headings were driven in it, and after brushing 3 feet out of the roof it made a good long-wall working, and in this manner the working was advanced until the east level was 99 fathoms in from the pit bottom. The nature of the seam became somewhat changed. The coal at these points

thickened to 2 feet 11 inches, but 6 inches of coaly blaes came on the top and fell with it along the whole of the faces. The nature of the roof and pavement, became so much changed that the roof above the bed formerly brushed to had to be strapped. In this way operations were carried on for a few fathoms, until a shot in the brushing exposed the upper leaf of coal at only 4 feet above the under seam. At this point another heading was formed off the level, and the headings and levels had not progressed far until the stone between the seams became reduced in thickness to 3 feet, and so soft that it was very difficult to keep up along the wall faces, and the brushing of black blaes changed to a kind of fireclay, while the pavement, formerly good, now became extra soft, swelling very much and causing much trouble to keep the drawing roads clear. The best way to work the upper coal to advantage had now to be considered, and I was advised to work it stoop and room, but after careful consideration determined that to do so would be a mistake, because working it in that manner an extra price would require to be paid to the miner, the 3 feet of rubbish between the seams would require to be turned over twice, the taking out the stoops would cause great inconvenience, the expense for wood would be great, and it would be a dangerous working. The working of both seams long-wall was resolved on, and the upper coal was cut through so that its thickness and quality might be seen. Its section was as follows :—

Splint Coal, ...	14 inches.
Stone, ...	4½ ,,
Free Coal, ...	14 ,,

The free coal was a splendid house coal. The stone resembled shale, but was of no marketable value, though it proved of great use otherwise. The Splint coal proved very good, and as it was sent to the gas works, commanded a greater price. The headings were then worked forward, and branch roads put in at stated distances, until it was considered far enough for men to draw. Levels to the right and left of the heading were then formed. As the heading progressed, the strata between the seams became reduced in thickness until it was only 2 feet 3 inches. The upper and the lower levels were also kept working rather in

advance of the branch roads, and at a stated distance. Another heading was then formed, cutting off the branch roads on the one side, and branching off new roads on the other. As the branches of the first heading came in contact with the new heading, the upper seam was opened up in the road heads, beginning at the level road, which was wrought at night. By cutting up the rise side of the level, and the low side of the first branch road, the two places were communicated, and so on in like manner, continuing towards the rise until the rise level was reached. By doing this a current of air was got along the faces of the upper seam and along the back of the waste. The upper seam was then worked back towards the heading road on the top of the stowage of the under seam, the old roads being used, as the sketch of the working plan appended shews (see Plate I.) At this point the rubbish between the seams could not be kept up, and in each road there were set six or eight large props upon the pavement of the under seam to the roof of the upper seam, spreading over an area of eight by six feet. The 4½ inches of blaes which came along with the bottom portion of the coal in large flags was broken up, and formed pillars along the face of the walls. The props on the road heads were drawn as the workings progressed. The road sides of the level were carefully built with 13ft. buildings along the face of the walls both on the rise and low levels, which kept the road in repair, and saved sending the debris to the surface. This preserved the road for bringing out the coals from the inner workings, and this was carried on in the same manner until the boundaries of the field were reached. Further, the upper seam of the heading already referred to was worked from the bottom upwards, the coal being wrought off the top of the buildings, which allowed the road to be repaired by making a self-acting incline and building all the debris. By this method no debris was sent to the surface, and when the coal was wrought back out of the old branch roads it saved our incline to a great extent. Again, the mode of working above described has been found to be very advantageous :—1st—With regard to safety. During the number of years this section has been in operation neither man nor boy has received the slightest injury. 2nd—By working the coal in this manner,

brushing or keeping up roads is dispensed with. 3rd—The pit wood required is nominal. 4th—A larger output was secured as well as two different classes of coal at the same time. This method of working was followed only when the strata between the two seams was not more than four feet in thickness. Where the stone was above four feet the usual long-wall working was carried out, by forming a working above the waste of the under seams, unless at stated distances of about 40 fathoms. By keeping these roads in good order in the under seams as they went to the rise, and by putting in a short back mine, the upper coal was cut and wrought from the levels below, after which the roads were cut off in the upper seam. By working in the way described, the advantage was secured of having the upper seams exhausted nearly as soon as the under ones.

DISCUSSION.

Mr HUGH JOHNSTONE said he did not think that Mr Simpson had mentioned the nature of the strata overlying the coal.

The SECRETARY said it was desirable that members who had had similar work should give them the benefit of their experience.

The PRESIDENT said he thought the working of a seam of this kind, with two to four feet of stone between, was a difficult matter. In the North of England, the Busty seam was often divided by a mid-stone of that thickness. It was always a problem how to work a seam under such conditions. He had no doubt it was the same in Scotland.

The discussion was adjourned.

The following paper on "A Few Practical Notes on Pumping" was then read by Mr William Archibald :—

CALIFORNIA STATE
LIBRARY

A FEW PRACTICAL NOTES ON PUMPING.

By William Archibald.

At a meeting of the Institute held in Edinburgh on the 31st of January last, Mr John Durie suggested that the Council should make an independent and exhaustive inquiry as to the relative efficiency of different kinds of pumping engines. It is not with the view of supplying Mr Durie with that information that this short paper has been written, but he has touched upon a subject of great breadth, and one there is ample scope for the members of the Institute to work upon. Valuable and thoughtful papers have been contributed by Mr M'Creath, Mr Baird, Mr Andrews, Mr Landale, and Mr Moore, but there yet remains a large field untouched. Mr Durie's suggestion would be all the more valuable, and productive of practical results, if a number of consecutive papers were read, descriptive of the various kinds of pumps and pumping engines that are working at our respective collieries. There is abundant material to work upon although one were only to describe the various kinds of special steam and hydraulic pumps that are at work. If each member would contribute to the Institute his experience, be it ever so little, of pumps, pumping engines, and the class of pump rods used, &c., or even if he were only to describe plainly the class of pump or pumps under his charge, without going into technical or theoretical details, a mass of very desirable information would be added to our Transactions, and be of inestimable value to those about to fit up new winnings. It is sometimes a very ticklish point indeed to decide what kind of pump will be the best to fit up under certain conditions. Suppose one decide on fitting up pumps of a fairly large description, it is generally too expensive an operation, and not always expedient to discard one class of pump, for a different, or perhaps a better class, even assuming a mistake has been made in arriving at the first decision. My experience has been mostly confined to large, or rather heavy fittings, but I have nothing new or original to set forth in this paper, but merely wish to describe a direct acting pumping engine and pumps, erected at No. 10 Pit, Haywood, belonging to the Haywood Gas Coal Company. The engine was made by Messrs Turnbull, Grant, & Coy., Canal Basin,

Glasgow, and was erected in 1873. Plate II. shews the side elevation. The steam cylinder, which is 84 inches in diameter, is placed directly over one end of the pit, and has a stroke of 12 feet. The beam over the engine is made of malleable iron plates, ¾ inch thick, and is 21 feet long, over all, with cast iron distance pieces riveted to the sides. One end of the beam is attached to the piston rod, the other end slides, in cast iron guides, with ordinary slide blocks, resting on two strong wood beams built into the walls of the engine-house. The vertical motion of the piston rod is maintained by means of two motion rods, fitted on each side of the beam nearest the piston.

It will be observed that the piston rod connecting the beam with the cylinder is very small compared with the other dimensions of the engine, being only 4½ inches in diameter. The only work this piston rod and beam have to do is simply to lift and lower the tappet or plug rod for opening and shutting the steam and exhaust valves, and to work the condenser pump. The steam acts only on the under side of the piston, and after doing duty in lifting the pump rods, is exhausted into the condenser, which is connected with the top of the cylinder, and the downward motion of the pump rods is retarded. Of course the steam in the cylinder can be throttled in its passage to the condenser, thus also preventing the pump rods descending too rapidly. The weight of the pump rods in forcing sets is generally in excess of what is required for forcing the water.

CONDENSER.

The condenser pump (Plate III.), which is worked from the beam by the tappet rod, also the top and bottom valve seats, are fitted with disc rubber valves about 16 inches in diameter by 1 inch thick. There are 18 of these rubber valves connected with the condenser and pump; each valve is held in its position by cast iron saucer-shaped guards, bolted to the valve seats by 1⅜in. bolts. It is very essential in engines of this type that these rubber valves be made of the very best material that can be got. If worthless valves are put in, the vacuum is affected and valuable time lost in renewing them that often cannot well be spared when the growth of water is heavy, requiring the engine to work

night and day all the year round. I have seen good rubber valves stand from one to two years, the engine going steadily from 2½ to 3 strokes per minute; and others not lasting one half of that time. The pit water, which is corrosive, sometimes eats through the top and bottom valve seats of the condenser, but of course the extent of this altogether depends upon the nature of the water supplied to the condenser. The pit water was used for our condenser, and only one of these valve seats—the bottom one—had to be taken out, after having been at work for fully 14 years. It was specially arranged once a year, about the month of August, when the growth of water was light, to stop the engine from 14 to 16 hours to draw the condenser pump, examine and renew (if need be) the valves, and clean the valve seat gratings, which got choked up with a heavy sediment that was in the water. The vacuum was always at its best, and the engine generally worked more smoothly after these periodical examinations.

Elevation.

The end elevation of the engine (Plate IV.) shows the main piston rod, 9½ inches in diameter, which passes down through the bottom of the cylinder, and catches the pump rods at a cross head which work in ordinary cast iron slides near the top of the shaft. This cross-head and the top ram is connected by two sets of parallel pump rods 18 inches apart. These parallel rods (Plate V.) are in various lengths from 24 to 32 feet each, are pitch pine, 12 inches square, and double plated with iron plates at each joint, each set of plates being respectively 12 and 11 feet long, 9 inches broad, and 1 inch thick. There are 30 bolts 1⅛ inch square at each joint, 16 bolts in one pair of plates, and 14 in the other. Between these pump rods are round iron bars nailed to the rods, about two feet apart. These are put on as steps for the purpose of travelling up the pump rods. The pump was stopped an hour or two every week for the purpose of having an examination made of the pump rods, plates, bolts, &c., from the ram to the surface. Beyond screwing up a loose nut here and there, no trouble was experienced with these rods from one end of the year to the other. With good strong fittings well put together to begin with, it is surprising the small amount of tear

and wear in rods of this description, and the trifling expense required for their maintenance when we consider that they send to the surface fully 300 tons of water per hour, and over 2½ million tons per year. During the six years these pump rods were under my charge no plate or rod broke in this set of rods, and I am not aware that a single rod or plate has broken since they started to pump 18 years ago.

The Ram

is of the ordinary description, 32 inches in diameter, with a 12ft. stroke; and, considering the work it has done, it is in first class condition. It was packed with the ordinary white rope, pleated about 2 or 2½ inches square, well steeped in tallow, along with two or three turns of common patent packing at the top. The ram had to be packed every six months. Considering the good condition of the ram, I had always a notion that we used more packing than was required, but attributed that to the contracted area of the

Rising Main

putting more pressure on the packing than it otherwise would have done if the rising main had been equal in area to the ram. The rising main is made up of two columns of pipes (Plate V.) above the air vessel, 15 and 20 inches each in diameter, the respective areas of which combined is not much more than half that of the ram. These two columns that form the rising main were lying on the ground not in use before this set of pumps were put in, and, consequently, were utilised for the purpose described, otherwise they would never have been where they are.

The Air Vessel (Plate VI.)

has a capacity of 27 cubic feet, the capacity of the ram being 67 cubic feet, or nearly 2½ times that of the air vessel. Although the capacity of the air vessel is small compared with the ram, I am not aware that the engine or pump rods ever suffered from shocks due to air in the rising main, because the velocity of the water never exceeded 45 feet, and generally not much more than

30 feet per minute. There was also a 2in. pipe from the discharge clack door for the purpose of running back water into the lodgment, to keep the ram on solid water. This back water pipe was frequently used, and, consequently, relieved the rising main of any air that would have collected. The valve of this pipe was opened and shut by the engineman. A wire from a float in the lodgment was led into the enginehouse which shewed the condition of the lodgment, and the valve was regulated accordingly. The ram casing, clack pieces, and rising main rested on three strong cast-iron girders, 12 feet long, 2 feet 6 inches deep, and 6 inches broad.

Clacks.

The suction and discharge clacks (Plate VII.) of this forcing set are of the ordinary flap type, about 3 feet in diameter, mounted with three plies of leather, with plates riveted top and bottom in the usual way. The clack seats had bars cast across their diameters for the purpose of strengthening the clacks, and had an angle of 20° for the lids to work upon. The following are the dates when the clacks were changed, and the number of days each clack worked for ten years:—

Suction Clack—Forcing Set.

Year.	Month.	Days Worked.
1876,	October 28th,	—
1877,	,, 11th,	348
1878,	September 28th,	352
1879,	August 23rd,	329
1880,	September 18th,	391
1881,	December 11th,	449
1882,	July 3rd,	204
1883,	April 2nd,	273
1884,	January 14th,	287
1885,	—	—
1886,	March 29th,	804
	Average,	381

Discharge Clack—Forcing Set.

Year.	Month.	Days Worked.
1876,	November 11th,	—
1877,	October 13th,	336
1878,	March 17th,	155
1879,	April 7th,	386
1880,	July 19th,	468
1881,	December 12th,	511
1882,	—	—
1883,	April 14th,	488
1884,	August 30th,	503
1885,	—	—
1886,	March 29th,	576
	Average,	427

In ten years there were nine suction and eight discharge clacks put in, the average days worked being 381 and 427 respectively.

Bucket Lifts.

From the surface to the top lodgment was fifty, from the top to the mid lodgment fifteen, and from the mid lodgment to the bottom ten fathoms—total depth seventy-five fathoms. There are two bucket lifts under the ram, and the shaft being only 5 feet 6 inches wide left no space for wood rods to pass the clack pieces of the forcing set, down to the bucket lifts, consequently iron rods 5½ inches by 3½ inches had to be put in from the apron past the top lodgment, where they catch the wood rods from the lower lifts. The first bucket lift, as stated, is fifteen fathoms. The diameter of bucket is 30 inches, the rods of which are from 30 to 32 feet long each, pitch pine, 12 inches by 10 inches, and double plated with iron plates, 12 feet long, 9 inches broad, and 1 inch thick, and 30 bolts 1⅛ inch square at each joint, similar to the forcing set. The bucket was mounted with gutta percha, the lids being of leather, lying also at an angle of 20° as the clack lids.

30in. Bucket.

The following are the dates when the 30in. bucket was changed, and the number of days each bucket worked for ten years :—

Year.	Month.	Days Worked.
1876,	June 10th,	—
1877,	March 29th,	292.
1877,	May 5th,	37.
1878,	May 4th,	364.
1878,	November 16th,	196.
1879,	—	—
1880,	May 4th,	534.
1880,	July 15th,	72.
1881,	June 25th,	345.
1882,	July 4th,	374.
1883,	—	—
1884,	January 12th,	557.
1885,	—	—
1886,	June 26th,	895.
Average,		366.

The second bucket lift under the ram is ten fathoms; diameter of bucket 24 inches. The rods are also pitch pine, from 24 to 32 feet long each, with two iron plates at each joint 10½ feet long, by 7 inches broad, and ¾ inch thick with twelve bolts 1 inch square.

24IN. BUCKET.

The following are the dates when the 24in. bucket was changed, and the number of days each bucket worked for ten years :—

Year.	Month.	Days Worked.
1876,	June 10th,	—
1877,	February 27th,	257.
1877,	September 8th,	198.
1878,	April 27th,	231.
1878,	September 7th,	133.
1879,	August 2nd,	329.
1880,	July 3rd,	335.
1881,	September 24th,	448.
1882,	December 2nd,	434.
1883,	—	—
1884,	January 19th,	413.
1884,	September 28th,	252.
1885,	—	—
1886,	October 2nd,	734.
Average,		341.

The pressure on the 30in. bucket was about 40, and on the 24in. only 26lbs. per square inch. Still the life of the 30in. bucket was greater than the 24in. one, although it had much more work to perform every stroke. Why one bucket in the 30in. set should do eight times the work of another, all things being equal, is a question that would not be easily answered. In fact, I do not know that any tangible reason can be given for the difference in the amount of work performed by each bucket. All the buckets for the ten years given were mounted by the same person, and the best quality of gutta percha was always bought and the highest price paid. Still there is not the least doubt that their life was often shortened by adulterated and inferior stuff. The average life of the lower bucket was less than the top one, but that was, I believe, in a great measure due to frequent cleaning of the lodgment. The stirring up of the mud and gritty matter while the lodgment was being cleaned, no doubt helped to destroy the lower bucket. The 30in. bucket got practically no water but what the 24in. one delivered to it. The working barrels in both sets were in good condition.

Bucket Clacks.

The following are the dates when the 30 inch bucket clack was changed, and the number of days each clack worked for ten years :—

Year.	Month.	Days Worked.
1877,	January 12th,	—
1877,	May 5th,	113
1878,	July 26th,	417
1879,	November 26th,	488
1880,	—	—
1881,	January 21st,	421
1882,	July 8th,	533
1883,	—	—
1884,	January 15th,	558
1885,	—	—
1886,	January 23rd,	736
Average,		466

24in. Bucket Clack.

1877, ...	February 22nd, ...	—
1877, ...	October 13th, ...	233
1878, ...	March 23rd, ...	261
1879, ...	February 8th, ...	322
1880, ...	February 3rd, ...	360
1881, ...	May 31st, ...	483
1882, ...	July 8th, ...	403
1883, ...	—	—
1884, ...	January 18th, ...	559
1885, ...	January 17th, ...	364
1886, ...	May 25th, ...	493
Average, ...		355

While the average life of the 30in. and 24in. buckets were 366 and 341 days respectively in ten years, or twenty-five days in favour of each 30in. bucket, there is still a greater difference in the life of the clacks. Seven of the 30in. one were put in and nine of the 24in. one in ten years, the average days worked being 466 and 386, or 80 days in favour of each 30in. clack. The 30in. clack had certainly a greater pressure to sustain than the 24in. one; but undoubtedly, if the cleaning of the lodgment told against the life of the lower bucket, it must also have done so in the case of the lower clack.

Five or six pits were working, and in each pit dooks were driven to the dip off the pit bottom. Three or four of these dooks had bucket pumps from 16 inches in diameter and upwards going night and day. These dook pumps were driven by the shaft pump rods, with cast iron cranks in the pit bottom. These cranks had to be restricted in their size for getting them down the shafts, 5 feet 6 inches being the widest. The arms of these cast iron cranks were naturally short, and consequently put a considerable radius on the shaft rods when the stroke was long.

The tear and wear on the crank seats and plummer blocks was very great, due to the short leverage, and it was decided to put in malleable cranks. These cranks (Plate VIII.) were made by Messrs Kesson & Campbell from a design of my own, and were a considerable improvement and saving compared with the cast iron ones. There was practically no restriction as to their size.

They could be easily fitted up and taken to pieces, and were light and strong. One of these cast iron cranks worked for some years the dook pump on the forcing principle—that is, the shaft bucket was on its down stroke when the dook bucket was on its up stroke. This system periodically gave trouble, and all the other cranks were fitted up to work on tension, which was found to be the safest and most economical method.

It may also be stated that there was another direct acting pumping engine in No. 4 Pit, made by Mr Barclay, Kilmarnock. The diameter of the cylinder was 55 inches, stroke 10 feet, and diameter of the ram 22 inches. This engine and shaft fittings were also a good substantial fit up, and the pump has been pumping constantly night and day for over twenty years with good results

In closing these notes I regret to say that I cannot state the amount of coal consumed for a given quantity of water pumped. There were so many engines all getting steam through the same pipes that it was difficult to apportion to each its share of the coal consumed, and I am not aware of any diagrams being taken off this engine since it was erected in 1873. Diagrams should be taken off our winding, haulage, and pumping engines periodically. They are all the more necessary with engines of this description where there is a heavy weight of pump rods, &c., to lift and lower at each stroke. The insuring of our steam boilers and their periodical inspection by competent officials specially trained for that purpose, has been productive of good results, both as to safety and economising of fuel. Similar arrangements might be made for taking diagrams off our engines to keep us posted up as to their condition. Diagrams properly taken off would at once show under what conditions the engine is working, and the weight of the pump rods could be more nicely adjusted to the work required. I have not the least doubt that in a large number of our heavy fittings, where forcing rams and engines of this description are used, we are lifting and lowering at every stroke weights far in excess of what is required to force the water to the surface, thereby wasting more coal than is needed, and subjecting our machinery to greater tear and wear than is necessary.

DISCUSSION.

The PRESIDENT said this was an excellent and practical paper, and he thought Mr Archibald's suggestion as to diagrams being taken by boiler insurance companies was a very good one.

Mr GRANT said he quite agreed with the president, but the diagrams did not require to be taken by the insurance companies. Any engineer employed at a colliery could take a diagram, and could take them from time to time.

The PRESIDENT said they did not seem to be taken very much.

Mr GRANT said the fact of the matter was that at the bulk of the collieries they had no steam indicator with which to take a diagram. The insurance representative only came once in three months, and if he took a diagram he left the colliery people to work it out.

Mr ARCHIBALD said his idea was this: Speaking for himself, he did not think the taking of diagrams by an ordinary colliery manager was very much practised. But Mr Grant was quite right. Although he mentioned the boiler inspectors as competent hands, he did not see anything to hinder an ordinary engineer to do the work. Still, it was almost a branch of the insurance inspection business, and apart from a colliery manager's work.

The PRESIDENT said he should think, if the suggestion were brought before the different insurance companies, they would be glad to take it up.

Mr MOORE said some of them did it. He had several taken regularly every three months by them.

Mr GRANT said there were any amount doing that, but they did not advise them whether their engines were doing wrong. They would not tell them if the clacks of the pumps were working or not, or whether the weight of the rods was too heavy or not.

The PRESIDENT said Mr Archibald referred to the corrosive water affecting the air pump. Did that water not affect the pumps, buckets, and clacks?

Mr ARCHIBALD—Very slightly.

Mr ARNOTT said it was after the water got hot that it affected them.

Mr GRANT asked if the corrosive action of the water had any effect on the india-rubber valves of the air pump.

Mr ARCHIBALD said he could not say that it had very much, because sometimes in the course of their annual examination they got the half to do another year. At other times they had to take the whole out. A great deal depended on the nature of the valves themselves. In fact, once or twice they expanded so much with the heat of the condenser that they overlapped each other. That was due to very inferior india-rubber. He did not think the water had the least effect upon the valves.

Mr DURIE, referring to Mr Archibald's statement as to the effect of the velocity of the water, and to its being 30 to 45ft. a minute, said this seemed a low velocity, and he could not see why it should exert any extra pressure on the back of the ram. As to the water not affecting the buckets, they had had the same experience with their pump. However, although it had no deleterious effect on the pump buckets and no injurious effect on the rams, it had a tremendous deal of effect on the valves until he made them of brass.

Mr ARCHIBALD, in reference to the question put, said they would observe the area of the rising main was not one-half of this ram, and consequently the friction, though he could not give it, must be considerably more than what it would have been at the rising main.

Mr DURIE said, in the discussion on Mr Moore's paper, it had been pointed out that unless they increased the density of the water there was not much increase of friction. He knew from experience that the amount in driving water through a column 600 yards was a mere trifle ($1\frac{1}{2}\%$) beyond the statical pressure. At 87 ft. velocity, he did not see how Mr Archibald's argument came in at all. The most important element in his paper was with regard to engine diagrams or coal consumption, which in pumping was most important. Without information on that, any information about pumping was of comparatively little value. Regarding Mr Grant's remark as to the weight of the pump rods, if they saw what steam was left, he thought they would come, from a calculation of the diagrams, pretty nearly to a conclusion as to whether the weight of the rod was excessive or not.

Mr GRANT thought that that was quite easy. If they were furnished with an indicator diagram, they would be quite able to say whether the pump rods were heavy or not, but with a direct acting engine they had to put in rods of sufficient strength to do the work. Even if they had an indicator, how were they to lighten the rod? How were they to take it off the engine? It was simply impossible, except by putting up a back-balance beam.

Mr ARCHIBALD said, with reference to Mr Durie's remarks about the quantity of coal consumed, the gist of his remarks was surely to draw attention in a great measure to the usefulness of taking diagrams. Although he had not taken them off this particular engine, he had taken them off another pumping engine, and at some future time he might give the results to the Institute. He regretted very much that they were not taken off this engine, and he thought as a whole managers did not pay enough attention to diagrams. While he gave the dates for buckets and clacks, he thought they might be valuable in reference to other pumps.

Mr MOORE said he had listened with great interest to Mr Archibald's paper, and he thought it was a valuable contribution. He admired the care with which the troubles met with were given, and he thought the record of the number of days which a clack lasted very useful. Accurate notes of this kind were too seldom kept at collieries. He thought it was an advantage to have indicator diagrams taken by a boiler inspector, as a person who was always working at the same machinery was apt to overlook details which an "outside man" would notice. Too heavy rods were shown by a diagram, and it would be easy to reduce them by a back balancing arrangement. There was a very simple one designed by his brother, Mr A. G. Moore, and erected at Fauldhouse, to balance a direct-acting arrangement. There was a ram fixed to the rods a few feet down the shaft, with a pipe connected to another ram on the surface, and the weight was put on the top of the ram on the surface. This made the back balance work on the same principle as Moore's pump.

The PRESIDENT asked the charge which the Boiler Insurance Companies made for a diagram.

Mr MOORE said the North British Boiler Insurance Company indicated and reported upon engines three times a year for from £2 to £4 per engine. When the boilers at the colliery were insured with the Company, they indicated the engines for a nominal fee.

The PRESIDENT asked if they had no scale of fees for indicating a single engine.

The discussion was adjourned.

zld's paper on PUMPING.

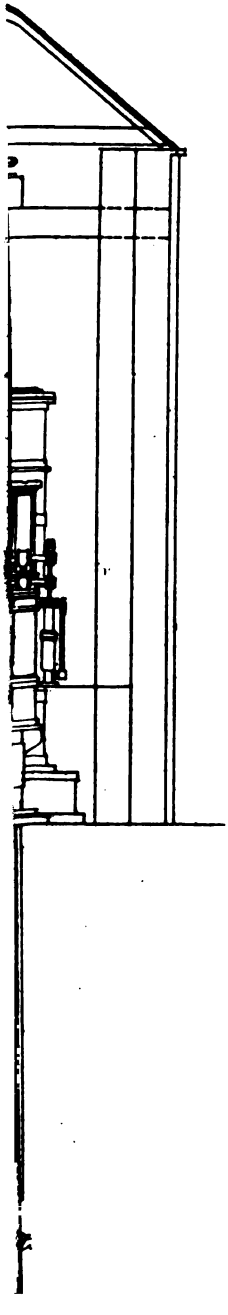

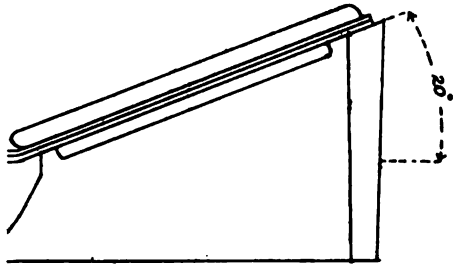
20°

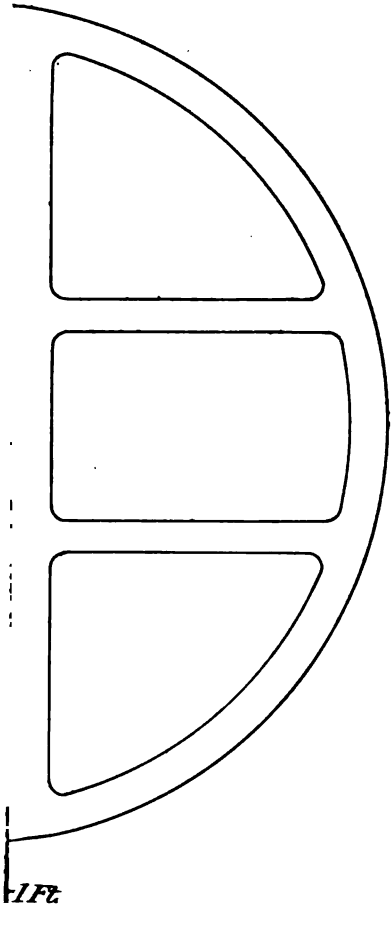
1 Ft.

SAN FRANCISCO.

THE MINING INSTITUTE OF SCOTLAND.

GENERAL MEETING,

HELD IN THE

ODDFELLOWS' HALLS, KILMARNOCK,

11th July, 1891.

J. B. ATKINSON, Esq., President, in the Chair.

The minutes of the last General Meeting were read by the Secretary and confirmed.

The following were elected by ballot as ordinary members :—

WILLIAM SPEIRS, Bridgeness Colliery, Bo'ness.
JOHN BROWN, Bridgeness Colliery, Bo'ness.
ANDREW WHITE, Ormiston Hall Colliery, Ormiston.
PETER STRACHAN, Rochsolloch Colliery, Airdrie.
THOMAS SHORE, Walton Park Colliery, Fairfield, Dunedin.
EDWIN R. GREEN, Abbotsford Colliery, Abbotsford, Dunedin.
JOHN CLARK, Dunnikeir Colliery, Kirkcaldy.
JOHN KELSO, Priestfield Terrace, High Blantyre.
WILLIAM LOGAN, Craigend Colliery, Polmont Station.
GEORGE KERR, Orchardhead, High Blantyre.
WILLIAM MILLER, Equitable Coal Co., Barakar, E. I. Railway, Bengal.
WILLIAM VALLANCE, Garriongill Colliery, Overtown.

The following discussions then took place :—

DISCUSSION OF MR DUNDAS SIMPSON'S PAPER ON "WORKING KILTONGUE COAL SEAMS IN TWO DIVISIONS."

THE SECRETARY read the following communication from Mr Robert M'Laren :—

The system of working as described by Mr Simpson is not very clear. At the top of page 46 he gives a description of the second working, and then goes on to say—"At this point the rubbish between the seams could not be kept up, and in each road there were six or eight large props upon the pavement of the under seam to the roof of the upper seam, spreading over an area of eight by six feet." Immediately before this he speaks of the upper seam being "worked back towards the heading road on the top of the stowage of the under seam." Either the rubbish is taken down in the first working, or it is not: if the former, then it has no need to be kept up, being already down; and if the latter, the second working is not worked on the top of the stowage but on the top of the rubbish. It would be well if Mr Simpson would state definitely what is done with the rubbish; whether taken down in the first working and packed in the walls, or kept on for a roof and only brushed in the roads to give height.

Mr DUNDAS SIMPSON, in answer to a remark by Mr Johnstone at last meeting as to the nature of the roof, said the strata were as follows:—Three inches of blaes, three inches of sandy balls, three inches of fakes, this kind of metals continuing for sixteen feet to a post of fakes five feet in thickness.

With reference to Mr M'Laren's remarks, he said when they first got this seam of coal they wrought the under portion first, but they only continued that for a short distance till the part between the two seams became thinner, when it all came down, and it was stowed into the workings. The props were resting on the pavement of the under seam, and these were withdrawn when they left off, coming backwards.

The PRESIDENT—They would be very long props?

Mr SIMPSON—Yes.

The PRESIDENT asked if they worked both sections together, or one after the other.

Mr SIMPSON—Both together. He had been asked what price was paid for working the coal. A man put out from 2 tons 10 cwts. to 2 tons 15 cwts. in the upper seam.

The discussion was adjourned.

DISCUSSION OF MR WILLIAM ARCHIBALD'S PAPER ON "PUMPING."

The SECRETARY read the following communication from Mr James T. Forgie :—

Some little discussion took place at last meeting on the want of information as to the indicated horse power and the useful effect of the engine and pumps and the consumption of fuel per horse power per hour. This we can all understand is a difficult matter to get at a colliery, and especially so when several engines, each doing different kinds of work, are steamed off one and the same installation of boilers. There is always the false notion that economy of fuel at a colliery is needless, and is no real economy, and hence the indifference to diagram taking and seeing to the actual duty exercised by colliery engines. However, where a separate pumping establishment has to be kept up for the special drainage of a mineral field, and fuel has to be taken to that establishment and charged, even at cost price, the necessity for economy and efficiency of work is at once admitted, and in some cases gets attention.

When listening to Mr Archibald's paper, it recurred to me that a few years ago I had given the pumping of a special district my special attention, and that my experiences then gained, and notes taken, might prove interesting to the members of this Institute. Previous to that time we were pumping the water from the field by every pit, but owing to the exhaustion of some of the deeper seams at the dip of the field, and the peculiar nature of the field through dislocations, &c., we found that by establishing a special pumping station at the dip pit of the field,

we could do away entirely with the pumps at some of the pits, and very considerably reduce the pumping at the others. At this pumping station the pit was 100 fathoms deep, and by levels we found that the pumps placed at 95 fathoms deep would keep the area of the whole field, to be presently worked, dry. We accordingly fitted in pumps to that depth, adapting an old plunger casing with not too large waterways to the bottom lift, making the plunger 15½ inches in diameter, with a column 35 fathoms 2 feet high. In the top lift we placed a new plunger casing 16 inches in diameter, with ample areas in the waterways, and having a lift to the surface of 58 fathoms 4 feet. We made the pump rods in each case to balance the lifts as much as possible, and made up the difference in balance by bolting on cast-iron plates on the light lift of rods.

The engine is an old horizontal one, with cylinder 26 inches diameter, stroke 4 feet, and geared 4 to 1 through tooth wheels. The tumbling crank sits right over the pit, and works directly on to one of the lifts of pumps through a set of guides, from the crosshead of which there are two connecting rods driving the double-nosed bellcrank, which in its turn drives the second bellcrank through radius bars, and this other bellcrank works the second set of pumps. The whole arrangement is compact, but not desirable. However, the engine was there, and we determined to make the best use of it. We put it in thoroughly good order, and applied a simple air-pump and condenser to it, worked off the end of the engine shaft. Plate IX. is a drawing of the engine. There are four double-flued Lancashire boilers, 25 feet long by 5 feet 9 inches diameter, fired underneath the boiler, the flame being conducted underneath, then back in the tubes, and again along the outside of the boiler to the chimney stalk.

The engine and pumps have now been going for five years, and have given every satisfaction and almost no trouble. Being a separate pumping station, we of course were able to get all the results we cared to take trouble in getting. We took diagrams of the engine, and measurements of the actual quantities of water pumped, and notes of the actual quantities of fuel consumed for a long time, and I will give you now a fair example. Plate X. shews the diagrams taken.

The following figures are one month's results, and are an average of many, and I give you these in full detail as I worked them out for myself, so that you can see at once how they are arrived at :—

Cylinder 26 inch diameter, stroke 4 feet, geared 4 to 1, stroke in pumps 6 feet.

Top lift, 16 inch plunger, 58 fathoms 4 feet.
Bottom lift, 15½ inch plunger, 35 fathoms 2 feet.
Total depth, ... 94 fathoms.

The pumps went 261,485 strokes during the month. Total hours in month, 758. Hours pumps were standing, 33. Actual hours pumping, 725—equal to 43,500 minutes.

261,485 ÷ 43,500 = 6·01 strokes per minute when pumping.

Foot pounds per stroke of top lift, ...	180,224
Do. do. bottom lift, ...	101,760
Total foot pounds per stroke of pumps, ...	281,984
Deduct 5 per cent., ...	14,099
Foot pounds per stroke, ...	267,885

267,885 × 261,485 = 70,047,909,225 foot pounds per month.

Coal consumed during the month, 125 tons. 261,485 ÷ 125 = 2091·08 strokes per ton of coal. 125 tons are equal to 2979 bushels of 94lbs. each. The duty of engine, or foot pounds of actual work performed per bushel of coal consumed, was 70,047,909,225 ÷ 2979 = 23,573,900.

I should here say that the dross used during this month was coking coal dross, which is very good in quality, but in comparing with Cornish pumping engines duties of 90 to 100 million foot pounds, we must remember that they base their calculations on a bushel of the best quality of round screened coal.

Horse-power exerted by engine in doing actual work, not counting that exerted in overcoming friction, &c.:—70,047,909,225 ÷ 43,500 = 1,610,297 foot pounds per minute ÷ 33,000 = 48·80 H.-P.

Diagrams taken with speed at 6 strokes of pumps per minute, shewed an average pressure of 12·8 lbs. of steam in piston, and a vacuum of 9·2 lbs. per square inch, equal to a total working

pressure of 22 lbs. per square inch. This pressure, and with the average strokes per working minute per month (6·01) gives an indicated horse-power of 67·95. The actual horse-power in work done was 48·80, leaving 19·15 horse power, or 28·18 per cent. of the total indicated horse-power as that used in overcoming the friction of the engine, gearing, pumps, &c., &c. In other words the engine was giving 71·82 per cent. of useful effect. The steam pressure in the boilers when the diagrams were taken was 40 lbs. per square inch.

125 Tons are 280,000 lbs. weight of coal—

280,000 ÷ 725 = 386lbs coal consumed per hour.

386 ÷ 48·80 = 7·91lbs coal consumed per h.p. per hour of actual work performed.

386 ÷ 67·95 = 5·68lbs coal consumed per indicated h.p. per hour.

Actual Ashes made by Coal—

125 tons of coal gave 35 hutches of ashes, weighing 4 cwt each, or in all 7 tons.

Ashes from coal = 5·6 per cent.

At the same time we kept regularly a monthly detailed cost sheet showing the actual cost of pumping per 100 million foot pounds, and per 100 tons pumped the depth of pit, 95 fms.; and also for 100 tons of water pumped 100 fms., and I here give you this cost sheet in full detail for six months ending 31st May, 1888, which was an average one. I have shown each month separately, as also the six months' total.

The dross used during the six months the cost represents was of ordinary quality.

(See the table inserted after page 78.)

In giving this cost no consideration is taken of the depreciation in plant or interest on capital. We have always found, and it will be seen from the cost sheet that pumping, like pits putting

out coal, &c., is cheapest done per stated quantity when the output is large. I do not mean to hold up the figures I have given as model ones, as on comparison with some Cornish pumping engine figures they are very far back indeed, but what I give them for is to show what can be done with an old engine and using the existing appliances by giving the matter a little attention and consideration, as I am convinced that the great majority of our colliery engines are working with anything but economy.

It was once said to me by an engineer that he believed the average consumpt of fuel per indicated horse power per hour of colliery engines in Scotland would be over 14lbs., and perhaps he was nearer right than wrong. Now, when we consider that now-a-days in cases where the economy of fuel is of the utmost consideration, as it is on board our transatlantic steamers, the fuel is kept down as low as 1½lbs. per indicated horse power per hour and even lower in some cases, it makes us see the great extravagance of our ordinary colliery appliances.

I also show the diagrams (Plate X.) and results of pumping at an Ayrshire pumping station with a compound condensing horizontal engine. The fuel used was very much inferior to that used in the other case, and the pumping machinery only worked 12 hours, necessitating the boiler fires to be damped over night, and hence the reasons for the results per 100 tons pumped 100 fathoms being so very little better with the compound condensing than with the simple condensing engine.

High pressure cylinder, 20in. dia., 4ft. 6in. stroke.
Low pressure cylinder, 34in. dia., 4ft. 6in. stroke.
Gearing 4 to 1. Stroke in pumps 6ft.
Pumps—Top lift 40 fathoms 4ft., two 14in. plungers.
" Bottom lift 31 fms. 2ft., two 14in. plungers.

Foot pounds per stroke—Top lift	...	195,810
" " Bottom lift		150,870
		346,680
Deduct 5%		17,334
Foot pounds per stroke,		329,346

329,346 foot pounds = 76·23 gallons of water, raised 72 fathoms per stroke of pumps.

Strokes for year 1885, ...	1,622,499			
Foot pounds ,, ...	534,363,555,654			
Tons of water ,, ...	552,156 (for year)			
	Amount. £ s. d.	Per 100 million foot pounds.	Per 100 tons of water.	Per 100 tons of water pumped 100 fms.
		d.	d.	d.
Labour, Enginemen, &c., ...	97 3 11	4·36	4·22	5·86
Fuel, ...	87 1 5	3·91	3·78	5·25
Repairs and Furnishings, ...	71 14 6	3·22	3·12	4·33
	255 19 10	11·49	11·12	1/3·44

Regarding the durability of the clacks and plunger packing we had every reason to be satisfied, the clacks going in some cases two, three, and four years, and the plunger packing not troubling us above once in the six months. I think the small size of the discharge pipe in the Haywood pumps has not had anything to do with the trouble they have had with the plunger packing, as the speed in the discharge pipe was very low.

The main thing in pumps is to have large water ways in the casings, and clack lids working as slowly and easily as possible, and well fitted with good connections, and the rest will come. I need not say to the practical members of an Institution such as this that there are a great many other matters besides the perfect working of an engine and pumps which must have attention to ensure the greatest possible economy. There are, among others, good boilers and plenty of them, having well proportioned fire-grates and properly conducted flues, the feeding of the boilers with water as hot as it can be made by the exhaust steam from the engine or the escape water from the condenser, if no other more economical means are available; the covering of all exposed parts of the boilers, steam and feed pipes to prevent loss of heat by radiation; also, seeing that the fuel used is thoroughly con-

sumed before it is drawn from the fires in the shape of ashes. These are all necessary points for attention if we wish to take the full value out of our plant and fuel.

The SECRETARY also read the following communication from Mr James Malcolm :—

As Mr Archibald's paper on the pumping engine at Haywood gives only a record of the work done by the different parts up to 1886, it might not be out of place to add further to his paper, and there is here given the record up to the present date taken from the books kept at the colliery for that purpose, beginning with the condenser referred to at page 49, which Mr Archibald fully describes.

CONDENSER.

YEAR.	MONTH.	REMARKS.
1887, ...	— ...	—
1888, ...	June, ...	New bottom grating and valves.
1889, ...	August 24th, ...	Condenser and grating cleaned and new valves put in.
1890, ...	August 22nd, ...	Condenser and grating cleaned, spare pump repaired and put in, also valves altered and renewed.

It will be observed on Plate III. that the valves worked on a short spindle turned on the saucer-shaped guards, about one inch in length. The travelling of the valves on the spindles caused holes in the centre of the valves to wear very rapidly and get too wide for the spindle. This seemed to be the cause of the valves of the condenser and condenser pump requiring to be changed so often. What generally went wrong with the valves and the working of the engine was that, after the holes in the valves got too wide for the spindles, they overlapped each other at times, also the water passed through between the spindle and the valve, affecting the working of the engine, and the vacuum decreased when the engine had to travel at a slow speed. The casting aside of so many disused valves caused inquiries and experiments to be made with the view of using them again. Eighteen of the spare saucer-guards were sent to the workshops, and the short spindle, where the valve used to work on, was cut off and holes drilled in the guards, so as to make them grating guards. Then a washer of iron was made about

¾in. thick, and bevelled at the edges to about the same degree as the guards, so as to prevent the washers if possible from cutting the india-rubber valves. Thus, instead of allowing the valves to travel freely on the spindle as formerly, they were held in one position. The valves then, when working, had to hinge up against the grating when open, and the holes that were drilled in the saucers allowed the water to flow through on the top of the valves and caused them to close more freely. The holes also prevented the valves from holding fast to the guards as a "sucker" would do. When the valves were renewed in August last, six old valves thus altered were put in the condenser pump that had been taken out as useless, and have now been working for the last eleven months with good results, and no signs of any failure as yet. Before the valves were renewed and altered in this way, the vacuum gauge on the engine only registered from 17 to 20 according to the speed of the engine, which was never higher than 3½ strokes per minute, as stated by Mr Archibald, and when the engine had to travel at 2 strokes the vacuum was almost lost. The vacuum now stands at from 23 to 25 on the gauge at different speeds, and has registered this regularly ever since the valves were altered. Before the valves were altered from their original way of working, they could never get a higher speed than 3½ strokes nor less than 2 strokes per minute. Now there can be got a speed as high as 4 strokes per minute, and as slow as one stroke per minute, without any loss on the vacuum. These particulars show favourably for fixed valves. Referring to the ram described on page 51, I was of the same opinion as Mr Archibald; too much packing was used, and withal there was always a considerable quantity of water passing through the stuffing box at each stroke of the engine. I partly accounted for this by Tuck's patent round packing of about 2in. diameter being used. This I consider a very bad and injurious packing for cold water rams. Of course, the packing glands and boxes cannot be as good now as they were when first put in. The packing of the ram with patent packing was stopped, and only "gaskine" of the very best quality used, and the piston was rubbed every day with tallow. The ram is now working without one drop of water flowing from it. None of the old packing is

ever withdrawn, only a turn or two added on the top of the packing already in as the need arises. It cannot be stated as yet whether this system will be more economical and give better results or not. It is hoped it may.

Referring to page 52, as the life of the clacks and buckets is given only up to 1886, there are here added the particulars from that date to the present time :—

SUCTION-CLACK FORCING SET.

YEAR.	MONTH.	REMARKS.
1887	April 24th.	—
1888	April 24th.	—
1889	Aug. 3rd	—
1890	—	—
1891	June 21st.	—

DISCHARGE-CLACK FORCING SET.

YEAR.	MONTH.	REMARKS.
1887	Dec. 28th.	—
1888	Sept. 15th.	—
1889	Dec. 9th.	—
1890	—	—
1891	March 6th.	—

30" BUCKET CHANGED.

YEAR.	MONTH.	REMARKS.
1887	July 28th.	—
1887	Oct. 21st.	Tail pipe split. Thought it was bucket until examined.
1888	August 18th.	—
1889	August 24th.	—
1890	August 22nd.	Still working.

30" CLACK.

YEAR.	MONTH.	REMARKS.
1887	August 30th.	—
1888	—	—
1889	July 2nd.	Still working.

24" Bucket Changed.

Year.	Month.	Remarks.
1887	July 30th.	—
1888	May 27th.	—
1888	August 24th.	—
1889	August 24th.	—
1889	Dec. 7th.	—
1890	July 6th.	—
1890	August 2nd.	Taken out to get new heart joint on foot rod and new heart on spear (bucket).
1891	June 7th.	—

24" Clack Changed.

Year.	Month.	Remarks.
1887	Sept. 17th.	—
1888	Dec. 5th.	—
1889	May 25th.	—
1890	July 5th.	Taken out to get new bolts in clack seat; put on again, and still working.

If any person were about to fit up heavy pumps, as mentioned in Mr Archibald's paper, it would be desirable, in my opinion, to have a different system of valves. As the leather is generally cut at the neck of the bridge, a little more space left between the bridge and the plates on the lids would give them a little more freedom to hang. An arrangement of some kind would require to be made to prevent the lids from lifting too high, as they have a tendency to open so wide that they would not close quickly enough at the return stroke. If some sort of "saddle" or guard were arranged and put on at the bridges of the bucket and clack lids it would, in my opinion, help the life of both. A better principle would be to have a doubled-hinged clack, which is already in operation at some collieries. This system prevents the clack lids from getting cut as they do in the clacks mentioned in this paper.

At page 52 Mr Archibald speaks of running back water into the lodgment. This is necessary at times, but is often done by the engineman when it could be avoided. The engineman is

sometimes tempted to open the valve and run back water, when he should rather temper his engine to go slower, which is a more difficult thing to do.

Mr A. M. GRANT said Mr Malcolm seemed to have a great deal of trouble with the valves, and he just wanted to mention that corrugated brass valves were now much used. He had found these valves to give as good results as the india-rubber ones, but in this case india-rubber should do very well.

Mr CROOKSTON said his experience of brass valves was that after using them for a period of three months they had to be taken out, as they got broken to pieces. Indiarubber ones had been substituted, and these had been working satisfactorily for eighteen months.

Mr GRANT—What was the diameter of the valves?

Mr CROOKSTON—4½ inches.

Mr GRANT—They should have worked well enough.

The PRESIDENT, quoting figures as to duty, given by Mr Forgie, said they showed that there was room for economy.

Mr GRANT said the Fife Coal Company gave them the results of the duty got by a single engine, which showed that the highest was 28 millions, and the lowest 18 millions. No doubt the duty got by the Cornish engine was high, but it was taken under better circumstances with regard to fuel, &c.

The PRESIDENT said there were a great many points raised for discussion in the papers which had been read on the subject, and it might be well to keep the discussion open.

The discussion was adjourned.

The following paper on "Coal Cutting Machinery at Westburn Colliery" was read by Mr Robert Martin:—

COAL CUTTING MACHINERY AT WESTBURN COLLIERY.

By Robert Martin.

The coal cutters are driven by compressed air, at a pressure of 60lbs. per sq. inch. This is produced by a pair of horizontal steam engines on the surface, 20in. dia. of cylinder, 48in. stroke. The steam is got from the pit boilers, and is from 40 to 45lbs. pressure. The air pressure is regulated by the pit enginemen, who work the engine throttle valve by means of bevel gearing and light shafting, the handle on which is close to their hand, and a pressure gauge under their eye. The air cylinders are 16in. dia., and are kept cool by means of a jacket of cold water flowing from a 1in. pipe. The air is forced into a receiver or boiler, 30ft. by 5ft., on which there is a safety valve set to blow off at the maximum pressure. The air is taken down the shaft in a column of 9in. pipes, and is carried a considerable way from there in 4in. pipes. From this main pipe a 3in. pipe is carried behind each machine. The distance from the shaft to the faces is 350 fathoms. The coal cutting machine is that known as Rigg and Meiklejohn's, supplied by Mr James Stewart, Murano Place, Leith Walk, Edinburgh, a drawing of which is shown on Plate XI. The principal measurements are :—Steel frame, 7ft. 10in. × 2ft. 10⅝in., carried on four wheels, and is kept in adjustment by screws at each corner. Gauge of rails, 1ft. 11in. ; height of machine, 1ft. 10in. The engines are coupled ; dia. of cylinders, 7¾in., bolted to the frame ; length of stroke, 10in. ; revolutions per min., about 140. A jib bolted on the side of the frame carries the disc 3ft. 9in. dia., with 8 or 10 snugs, on which the picks are bolted. This disc is practically a circular saw, working horizontally on the pavement, (See Plate XI., Fig. 2.) A bevel pinion, with 27 teeth, on the engine shaft, is geared into a circular rack of 60 teeth on the disc. The disc. makes about 62 revol. per min. The picks, 5in. to 6in. long, are made of best titanic steel, are in sets of 4, and so shaped that the whole thickness of holing, about 4in., is fully occupied by pick points. The disc revolves on a phosphor bronze ring as a bearing, and is kept in position by a bottom plate, bolted with stud bolts to the jib. The best lubricant we could get for this bearing was ordinary bar tallow. The machine is reversible, and

cuts either way. The engines are reversed by turning the eccentric pulleys round on the shaft, no links being used. There is a guide block keyed on the shaft with a slot, in which a stud fixed on the pulley works, and is tightened up when in position by means of a nut. The machine, whilst cutting, is hauled along by gearing from the main driving shaft, on which there is bolted a split worm, which works into a pinion on the under shaft. The under shaft extends from the engine sole plate to the front of the machine in which the bearings are seated. A solid worm on the under shaft is geared into a pinion on the hauling shaft, on which the drum or chain wheel is placed. A ⅜in. chain is coiled once or twice round the drum, and is made fast to a prop 60ft. ahead. The engines make 192 revols. for one of the hauling shaft. The chain wheel is 9in. dia. The rails were of best steel, 9ft. long, 2in. square, with holes in the end to fit into snugs on the iron sleepers. The 3in. cast-iron pipes are carried up to the roadhead of the middle road of the longwall face, and at the end there is a shut-off valve. From this the air is taken along the face to the machine at either end of the wall by 2½in. flexible hose tubing. In this way half the length of the tube is sufficient to cut the whole distance of face. The depth of holing was usually 30in. to 33in., as it was found inconvenient to cut deeper. The length of face as shown on Plate XII., is 9 walls of 14 yards each, equal to 126 yards in all. The drawing roads are all on one side of the main heading, which is not the best arrangement, but is due to unavoidable circumstances. These roads are cut off every 50 fathoms by a new slope road. The section of roof, seam, and pavement are as under :—

Roof, soft blaes and ribs.	
Craw coal, ...	9in.
Dark fireclay falling, ...	4in. to 6in.
Coal, ...	36in.
Pavement, rib stone and camper,	8in.
Coal, ...	10in.

The machine ran across the hill and the ground was practically level, except at one end which dipped into a hitch. The cutting was done at night, and the walls were stripped during the day. Output from each place is about 10 tons; number of men

employed—nine fillers, five drawers, four brushers, three machinemen. The whole of the work is done under three separate contracts, for a rate per ton of coal produced. A cut 6ft. by 3ft., has to be made at each end of the wall for the machine to start from and run into, for which fathomage is paid. The roof is rather weak. A cundy midway between roadheads is left for want of stowing material. The drawing roads are brushed to a width and height of 9ft. by 5ft. 6in. immediately after the machine has passed, and are built close up to the coal. The removal of the coal allows a passage for the machine on the next journey. Two men work the machine, shift forward the rails, &c., whilst the third man shovels the gum from the holing, puts up props, and puts in gibs to carry the coal till the miners arrive, when it is allowed to fall. The coal is got in large strong lumps. The percentage of gum made by the cutters and dross in the breaking out is about 20 per cent. The coal is taken by the drawers to a main and tail rope haulage. The haulage is worked by an ordinary horizontal engine in the pit, 14in. cylinder, driven by compressed air. The drums, 6ft. dia., are loose on the shaft and worked by a clutch. The hutches have end doors, edge wheels, and flange rails, and carry ½ ton.

The quantity of fuel used for a single cutting such as we have described may be taken as about 5 tons. The boilers were fired with gum from the washer, which had passed through a $\frac{3}{16}''$ mesh, and as they had other work to do this is only a rough estimate.

The wall face described consisted of eleven places at one time, but was shortened owing to proximity to the hitch mentioned. In clean coal, with a holing such as exists here, eleven or twelve places is about enough for one shift. A better arrangement for the main haulage road than the one shown would be to have it in the centre of the longwall face, with slope roads branching to right and left. This would facilitate both the drawing of the coal and the cutting off of the old roads.

It requires some considerable training to make expert and efficient machinemen, who must be active and steady men; and, like other machinery, it has to be kept in thoroughly good order, every little trifle carefully and promptly attended to, to give good and steady results.

DISCUSSION.

The PRESIDENT said this was a very clear description of a coal cutting machine, and he would like to ask whether there was much advantage in the use of it. It all really depended upon whether there was any saving in the cost of producing coal. Of course they were not entitled to ask for figures, but he would ask whether there was a great advantage over hand labour.

Mr MARTIN said they had never tried to work the machine on the 3ft. seam with hand labour. He had heard it said that when the wages were lower the cost for getting the coal in this seam, longwall, by hand labour, was 75 per cent. over present machine cost; but that was only a matter of hearsay to him.

Mr GRANT asked what difference there was of pressure at the surface and at the machine; what was the length of the face, and if the holing was in the coal.

Mr MARTIN said he had never taken down a pressure gauge, and could not therefore state the difference of pressure, but he knew that if there was less than 30lbs. pressure at the surface there were complaints from the men. The length of each face was fourteen yards, and the holing was in the coal.

Mr HASTIE said Mr Martin might give them the exact cost.

The PRESIDENT said they could not ask for that, but it would be a great advantage if they had it. He had seen it in one case stated that there was a saving of 1s 6d per ton, and in the face of such a statement he could not understand why the machine was not making greater progress.

Mr MARTIN said it depends on the wages for which men can be got to work. The output and number of men employed are given. Knowing the wages, the rest is a matter of arithmetic.

The SECRETARY asked Mr Martin to explain what the camper was.

Mr MARTIN said the rib stone was about three or four inches, under which there was some wild coal which looked well, but which was like blaes when tried to be burned. This was the camper.

Mr FAULDS said it was only a portion of the seam above the camper which the machine worked, a portion under the camper being left, so that comparisons could not well be made.

Mr ROBERT WADDELL said there was a machine introduced at Gartsherrie about 1870, and along with others he went down and examined minutely into the cost, when it was found not to be so much in favour of the machine as was expected. At that time men were remarkably scarce, and it was generally the case that this machine was most used where hand labour was not available.

The PRESIDENT—Was that Baird's machine?

Mr WADDELL—Yes.

Mr DUNDAS SIMPSON said the machine cost really as much as hand labour, but there was a saving in the small proportion of dross it had.

The SECRETARY said if the holing was in the coal, the holings would be dust and not therefore of value.

Mr GRANT asked if ever he had tried to hole in the bed under the coal with the machine.

Mr MARTIN said they sometimes let the machine down into the camper, and they were sorry for it. They were glad to get it out.

Mr ROSS said his experience was that they could drive a nail into the camper and it would not split.

Mr GRANT said that was his experience of camper too. The machine, he continued, would cut for a certain length of time and then appeared to choke itself.

Mr FAULDS said both hand and machine labour had been worked at Gartness in the Airdrie district, and perhaps there were some members present who could make a comparison as regards cost in general.

The PRESIDENT said he had seen the machine working in that district, and the saving was in getting large coal. All the coal sent up was household coal of good class. They had some difficulty there in getting good men to work the machine. The main question was that of cost. In America where the cost of labour was higher they seemed to be going in more for the application of machinery.

The discussion was adjourned.

The following paper by Mr Robert M'Laren on "Boring Machine for Tapping Wastes" was read by the Secretary:—

BORING MACHINE FOR TAPPING WASTES.

By Robert M'Laren.

In a working approaching an old waste known to contain water, bores must of necessity be kept in advance, and in practice it has been found that, with the ordinary method of drill or jumper, the boring of holes of over 20ft. becomes difficult, owing to their getting stopped up with the *débris* made by the tool, and this difficulty is increased when it is necessary to have a large barrier sufficient to withstand the pressure of water behind, in order to protect the workings to the dip from being drowned. Such a difficulty presented itself at Alloa and Devon Collieries, where there are large areas of waste with water, and to tap these wastes, and leave a sufficiently strong barrier of coal, the machine about to be described was introduced by Mr Andrew Hunter, manager of Alloa Colliery.

The machine (a drawing of which is shewn on Plate XIII.) consists of a cylinder *C*, 1½ inches diameter inside, with packing glands *a*, *a*. At *b* is an opening, to which is attached an india-rubber pipe, ⅜in. diameter, fixed to pump chest *D*. Two plunger pumps *d*, *d*, 1in. diameter, with 1in. stroke, are fixed to crank spindle *E*, and from *c* is led an india-rubber pipe to a cistern containing water for suction. On the one end of the crank spindle is a handle 9 inches long, with which to turn the machine, and on the other end *F* is the part to which the rods are attached. The whole is fixed on to a bogie *G* (Fig. 3), 3ft. 6ins. long × 2ft. 6ins. broad × 4ins. deep, and running on ordinary cast-iron rails, and set at the inclination of the seam. In order to keep the machine moving forward while the drill is cutting, a chain ¼in. diameter is fixed to a barrel *e* (Fig. 1), with ratched wheel, and passes round two pulleys *f*, *g* (Fig. 3), 6ins. and 10ins. respectively, fixed to prop *h*, and a weight *j* is hung upon a hook at the other end of chain. This hook is so made that a number of similar weights can be placed upon it.

Rods.—The rods, which are hollow, are ⅞in. diameter outside, with ½in. diameter hole inside, and in 6ft. lengths. A box, F, (Fig. 1) is put on the crank spindle, into which the first rod is screwed with ¾in. diameter screw. The other rods are screwed into each other, as is done in the ordinary method of boring. The drill *K*

(Fig. 3), which is also hollow, is 1½in. outside diameter, and of the ordinary description, as used by miners for drilling holes, except that 1½in. from the point is the hole to allow the water to escape.

Where water enters from pumps at *b*, are four small holes drilled through crank spindle into the hollow—the hollow being continued right out to *F*. A groove *b*, *b* (Fig. 4) is also cut, into which a set pin *m* (Fig. 2) is screwed to keep cylinder *C* in its place.

Mode of Application.—In applying the machine, the handle is turned, which works the cranks, and water is pumped into cylinder *C*, and forced into hollow rods to drill point, and is discharged at the circumference of rods, carrying the *débris* which has been made with it. As the drill cuts, the machine moves forward, and is kept from going back by ratched wheel. When 6ft. has been cut, the machine is unscrewed from rods, and run back, and another rod fixed. Care must be taken in cutting the rods not to allow them to become empty of water, as, if this is not guarded against, they get filled with small coal and *débris*, and have to be drawn. To prevent this, a small plug is inserted at part where rods are cut. Should the weight *j* reach the floor before the machine is up distance, it is taken up by turning the ratchet handle.

Work Performed by the Machine.—Holes have been bored at Devon and Alloa Collieries. At the former there is a large area of waste in the lower 5ft. coal, with a pressure of 135 lbs. per square inch, and waste has been tapped at several places—the greatest distance bored for one hole being 168ft., 50ft. of which passed through a hard sandstone. Up to 20ft. or so, two men can easily bore one foot per minute, while 30 yards, on an average, can be bored in a shift of eight hours by two men. The following is section of seam bored :—

Sandstone.		
Blaes, ...	... 1′ 8″ to	6′ 0″
Cherry coal,	... ...	0′ 7″
Splint coal,	... ...	1′ 1″
Cherry coal,	... ...	0′ 7″
Daugh, ...	... ...	0′ 1″
Cherry coal,	... ...	3′ 0″
Fireclay.		

In all, the machine has bored in this seam holes to an aggregate distance of 900 yards.

At the latter colliery, three holes were put in, at different angles, a total distance of 46 yards in lower 5ft. coal in eight hours by four men, which included the shifting and fixing of the machine.

DISCUSSION.

The PRESIDENT said this was a good paper on an important subject, but he supposed the discussion had better remain over till they had the paper in their hands.

Mr MARTIN asked if there was anything connected with the machine to regulate the inflow of water under high pressure.

The PRESIDENT said Mr M'Laren would probably give them information on that point.

The discussion was adjourned.

Mr Emil R. Kunz then exhibited Wolf's Safety Lamp, and apparatus for filling and testing it.

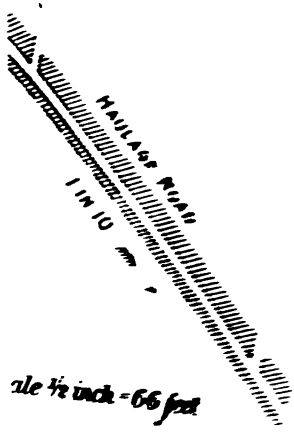
HAULAGE ROAD
1 IN 10
cale ½ inch = 66 feet

THE MINING INSTITUTE OF SCOTLAND.

ANNUAL EXCURSION

AND

SUMMER MEETING, AUGUST, 1891.

THE Council of the Institute having chosen Manchester as a fitting place for the annual excursion of the Institute, on 19th to 22nd August, nearly fifty of the members took advantage of the opportunity thus afforded them of visiting the Manchester Ship Canal and some collieries in that neighbourhood. By arrangement with the Caledonian and other railway companies, special carriages were provided for the party, which left Glasgow on the afternoon of Wednesday, 19th August, arriving at Manchester in the evening.

The following day was set apart for the visit to the Ship Canal, admission to it having been kindly granted by the engineer, Mr E. Leader Williams. The party, starting from the Victoria Hotel about 9.30, proceeded to the entrance to the canal works at Pomona Docks, where they were met by Mr W. B. Tracey and Mr A. Goodier, who supplied each with a map of the canal and a pamphlet descriptive of this great undertaking. Under the guidance of these gentlemen, who were assiduous in their attentions, the party walked several miles along the course of the canal, which for a considerable distance here lies in the line of the River Irwell. The chief works in this section, which are at various stages of progress, are the Manchester and Salford Docks, the Mode Wheel Locks, and the Barton Swing Aqueduct.

The water space of these docks, which are shown on Fig. 1 is

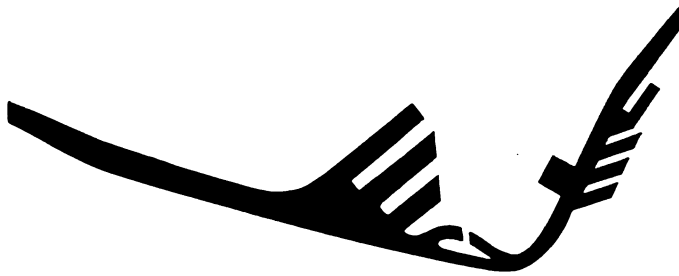

FIG. 1.—MANCHESTER SHIP CANAL.—MANCHESTER AND SALFORD DOCKS.
Scale 2 inches = 1 mile.

over 100 acres in extent. The locks, at which there is a fall of 13 feet, have accommodation for the largest steamers, the larger of the two locks there being 600 feet long and 65 feet wide. The Barton aqueduct is a swing bridge for carrying the Bridgewater Canal over the Ship Canal. The aqueduct, with its contained water, is to be swung round by hydraulic means to allow ships to pass in the Ship Canal beneath, and there will also be appliances for lowering boats, loaded or otherwise, from the Bridgewater Canal into the Ship Canal. Figs. 2, 3, and 4 shew a

FIG. 2.

FIG. 3.

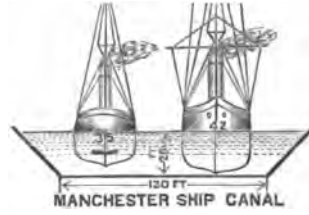

FIG. 4.

section of the Suez Canal, of the Amsterdam Canal, and of this

canal, from which it will be seen that the Manchester Canal is the most capacious of the three.

Returning to Manchester, the party took train to Liverpool for the purpose of seeing the canal at the other end. They boarded a steamer at the docks, and were conveyed some miles up the River Mersey to Eastham, on the opposite bank, where the canal begins. It skirts the estuary of the Mersey for ten or twelve miles as far as Runcorn, and for some miles from Eastham the works are completed. The party had the pleasure of a sail on this portion as far up as Ellesmere port. The opportunity afforded of seeing and contrasting the first and last sections of the canal, which between them illustrated processes and achievement, was greatly appreciated. The party returned to their hotel at 9.30, having spent twelve hours in a most enjoyable manner.

The following are some particulars of the canal, and of the plant used in its construction :—

MANCHESTER SHIP CANAL.

Total length of Canal, ...	35½ miles.
Average width of Canal at water level, ...	172ft.
Minimum depth, ...	26ft.
Minimum width of Canal at bottom, ...	120ft.
Except between Barton and Manchester where it will be . . .. at bottom, ...	170ft.
Except between Barton and Manchester where it will be . . .. at water level, ...	230ft.

DETAILS OF LOCKS.

Name.	Large Lock.	Intermediate.	Small Lock.	Sluices.	Fall.
Eastham	600ft × 80ft	350ft × 50ft	150ft × 30ft	2 Sluices, each 20ft wide	—
Latchford ...	600ft × 65ft	350ft × 45ft	—	3 Sluices, each 30ft wide	16ft 6in
Irlam	600ft × 65ft	350ft × 45ft	—	5 Sluices, each 30ft wide	16ft
Barton	600ft × 65ft	350ft × 45ft	—	4 Sluices, each 30ft wide	15ft
Mode Wheel	600ft × 65ft	350ft × 45ft	—	4 Sluices, each 30ft wide	13ft

Total fall from level of water in Manchester Docks to level of tide rising 14ft. 2in. above Old Dock Sill at Liverpool, ... 60ft. 6in.

This being the ordinary water level in Canal between Eastham and Latchford.

SUBSIDIARY LOCKS.

Weston Marsh, ...	229ft × 42ft 8in.
Weston Mersey,,...	600ft × 45ft.
Bridgewater, ...	400ft × 45ft.
Runcorn (Old Quay), ...	250ft × 45ft.

WATER AND QUAY AREAS, &c.

SALFORD DOCKS :—

Water Space, ...	71 acres.
Area of Quays, ...	129 ,,
Length of Quays, ...	3⅜ miles.

MANCHESTER DOCKS :—

Water Space, ...	33½ acres,
Area of Quays, ...	23 ,,
Length of Quays, ...	1¾ miles.

PARTINGTON COAL BASIN :—

Water Space, ...	5½ acres.
Area of Quays, ...	20 ,,
Length of Quays, ..	½ mile.

WARRINGTON DOCK :—

Water Space, ...	22¾ acres.
Area of Quays, ...	7 ,,
Length of Quays, ...	⅜ mile.

Distance of Water-line from top of Quay Wall in Salford Docks, ... 8ft.

Height from the Water-level in Canal to underside of Girders in High-level Bridges over Canal will in every case leave a clear headway of ... ... 75ft.

Depth of Lower Sill of Eastham Locks, below Old Dock Sill, ... 23ft.

Depth of the Lowest Sills of the Liverpool Docks, below Old Dock Sill, ... 12ft.

Depth of the Canal throughout, ... 26ft.

Depth of Water on all the upper Sills of Locks, in both estuary and inland portion of Canal, ... 28ft.

This will enable the depth of water in the Canal to be eventually made 28ft. throughout if found requisite.

PLANT IN USE IN MAY, 1891.

Steam Excavators, &c., ...	96.
Including 6 Floating Dredgers.	
,, 3 German Navvies.	
,, 2 French Navvies.	
,, 59 Rushton and Procters.	
Locomotives, ...	173
Steam and other Cranes, ...	192
Portable and other Steam Engines, ...	182
Steam Pumps, ...	212
Wagons, ...	6,300
Pile Engines, ...	59
Length of Temporary Railway, ...	228 miles.
Number of Men and Boys employed, ...	14,588
,, Horses employed, ...	189
Quantity of Coal used monthly, about ...	10,000 tons.
,, Cement ,, ,, ...	8,000 ,,

Friday was occupied in visiting Poynton and Moston Collieries. Leaving at nine o'clock, a two hours' drive brought the party to Poynton Colliery, which is situated about midway between Stockport and Macclesfield. They were met by Mr G. C. Greenwell, jun., the manager, and conducted over the works, an engine and trucks being provided to save time. The property belongs to Lord Vernon, and the collieries are in his own hands. The novel features at this colliery are a coal screening arrangement, of which Mr Greenwell is the designer and patentee, and an electrical pumping arrangement for a water supply. The following is a description by Mr Greenwell of his screen, a drawing of which is shewn on Plate XIIIA. :—

"The arrangement consists of a series of parallel short linked endless chains, driven by engine power, and working between fixed bars of a particular section and of various widths. The coal is tipped on to the screen, and is carried forward by the chains, which travel at a slow speed, and as it passes forward, the dirt and stones are picked out by men, boys, or women, stationed at intervals on each side, and the various sizes of small coal drop through between the chains and bars into wagons placed below; the smallest size passing through in the first length, and the larger sizes in the succeeding lengths, until at the end of the screen the large coal is delivered, free from small and dirt, into the wagons placed ready to receive it. It will at once be seen that the screen may be erected of any length and with any number of sections, and that by putting a sufficient number of small guiding pulleys to keep the chains steady, the coal may be very accurately sorted into as many different sizes as required. The plan shows the arrangement adopted at Poynton, and is suitable for the particular requirements of the colliery, but this arrangement could be varied very considerably.

"The cost of erection is comparatively small, and the screen can be fitted up and set to work without much interference with existing arrangements. A large amount of coal can be passed over one screen and can be efficiently dealt with at a very low working cost. The following particulars with regard to the two screens which are now at work at Poynton may be of interest:—

Speed of chains, ...	73 feet per minute.
Quantity of coal dealt with, ...	100 tons per hour.
Equal to for each screen, ...	50 tons per hour.
Working cost, ...	¼d per ton.
First cost of each screen,...	Under £100."

The electrical pump has been installed to supplement the existing water supply for the miners' and other houses on the estate. A well 4½ feet in diameter is sunk 28 yards into the New Red Sandstone, and a bore 6 inches in diameter goes 25 yards further. A small engine is placed at the Lady Pit, where the pumping operations of the collieries are carried on. This engine worked by the boilers at the pit drives a gramme dynamo, which acts as a generator, and is capable of supplying a current of electricity equal to about four indicated horse-power. The current is taken from the generator by means of insulated copper wire a distance of about 400 yards, to an electric motor fixed at the top of the well. This motor, which is of the same type of machine as the dynamo, drives by means of belt gearing and cranks, two ordinary ram pumps having 3½ inch rams and 9 inch stroke fixed in the well. The speed of the dynamo and motor is about 800 revolutions per minute, and the speed of the pump about 40 strokes per minute, the quantity of water pumped being about 1200 gallons per hour. The machinery requires little attention beyond lubrication. It was erected by Messrs Stanley & Davies of Hyde.

At Poynton Towers, the mansion house on the estate, the party were received by the Hon. William Vernon, Lord Vernon's brother, and introduced to his mother, the Dowager Lady Vernon. A sumptuous luncheon, kindly provided by Lord Vernon, was afterwards served.

Moston Colliery, situated between Manchester and Oldham, was reached about 3.30, after a drive of two hours. The party were there met by Mr Platt, the principal partner of Platt Brothers & Co., the owners of the colliery, and the manager, Mr Greensmith. The members divided, some going underground, and others remaining on the surface and examining the very complete fittings for the raising and handling of a large output. Trough and bash washers are employed for coal-washing, and a thorough system of dry cleaning is also in use. The screens known as

Lyall's Patent are shakers which act in a direction at right angles to that in which the coal travels to the trucks. The picking band, which is used for nut coal only, is made of canvas, and travels at the rate of 40 feet per minute. The coal workings in progress are very steep—about 1 in 2—and are entirely to the dip, the haulage being done by means of endless rope and ordinary single rope, actuated by eighteen pairs of small compressed air engines situated at different places underground. The compressors, which are on the pitheads have 26-inch steam cylinders, 30-inch air cylinders, and 5 feet stroke, with steam pressure of 75 lbs., and air pressure of 45 lbs. The ventilating fan is of the Schiele type, 10 feet in diameter, running at 267 revolutions per minute, and producing 90,000 cubic feet at a water gauge of 2 inches. At this colliery material is taken from the surface to pack the goaf in the working of a thick seam called the Big Mine. Mr Platt and his manager were most kind and courteous, accompanying the party underground, and giving every information desired. After partaking of refreshments, kindly provided by Mr Platt, the members mounted their carriages and returned to the hotel, which was reached about seven o'clock.

The same evening there was held a

GENERAL MEETING,

IN THE

VICTORIA HOTEL, MANCHESTER.

Mr JAMES GILCHRIST, Ex-Vice-President, in the Chair.

The minutes of the last General Meeting were read by the Secretary and confirmed.

The following were elected by ballot as ordinary members :—

JAMES MAXWELL, Balquhatstone, Slamannan.
JAMES NIMMO, Dixon Street, Glasgow.
ROBERT WALLACE, Fairhill Colliery, Hamilton.
WM. M'ALLISTER, Sheardale Colliery, Tillicoultry.
GEORGE TENNANT, Castlehill Colliery, Carluke.
ISAAC LOVE, Shotts Iron Works, Shotts.
JOSEPH WHITTON, 93 Flemington, Cambuslang.
JOHN ROBERTSON, Jr., Moss House, Cardonald.
GEORGE KNOX, Davie Row, Glenbuck.
JAMES ALLAN WOODBURN, Langloan Iron Works, Coatbridge.

The discussion of the papers read at former meetings by Mr Simpson, Mr Archibald, Mr Martin, and Mr M'Laren, was adjourned.

On the following morning, about half of the party betook themselves to the railway station for the return journey to Scotland, the others remaining till a later train ; and so ended an excursion which gave all who took part in it no little enjoyment, enhanced by the great kindness met with at all hands. The party was under the direction of Mr Barrowman, the secretary of the Institute; and Mr T. W. Stafford, a member resident near Manchester, gave valuable assistance.

'EEN FOR SORTING COAL.

Table for picking out Dirt.

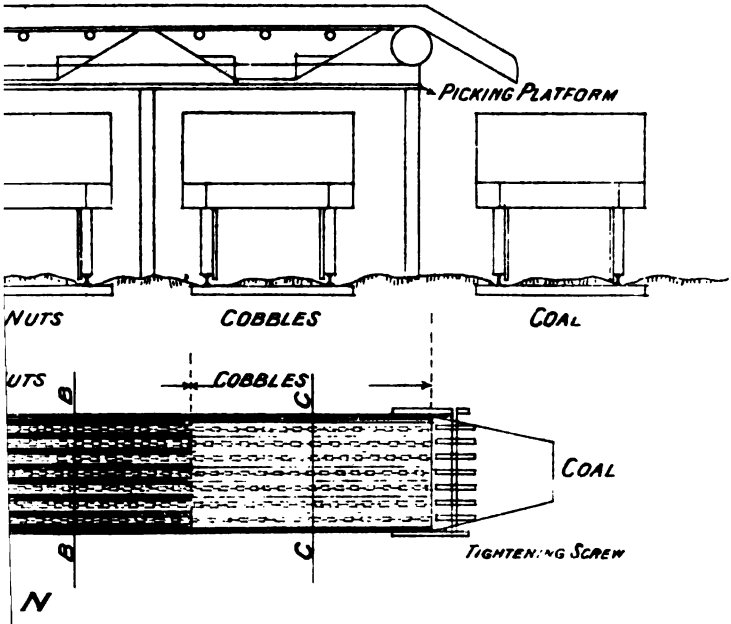

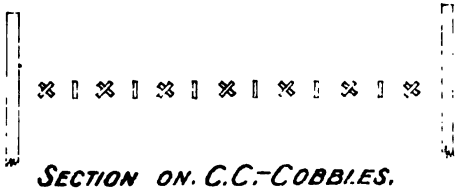

SECTION ON. C.C.-COBBLES.

COLLIERY HUTCHES.

The Council of the Institute having invited the members to furnish drawings with descriptions of hutches used at their collieries with a view to publication in the Transactions, a considerable number responded, and the drawings shewn on Plates XIV. to LIV., with relative descriptions, are now issued as presenting a fairly complete list of the various kinds of hutches in use in Scotland.

An index and tabular abstract for ready reference are added.

There is attached to the description of each hutch two estimates of the cost, made up from the particulars there given by firms engaged in building hutches.

CALIFORNIA STATE
MINING BUREAU

EXPLANATION RELATIVE TO PLATE XIV.

Name of Colliery, ...	AUCHINRAITH, BLANTYRE.	NORTH MOTHERWELL, MOTHERWELL.
Owners, ...	MERRY & CUNINGHAME (LIMITED).	MERRY & CUNINGHAME (LIMITED).
Height of Seams, ...	Ell Coal, 4 ft. 9 in., worked Stoop and room.	5 ft., worked Stoop and room.
„ ...	Pyotshaw Coal, 4 ft. 1 in., worked Longwall.	4 ft., „ Longwall and Stoop and room.
„ ...	Main Coal, 4 ft., worked Longwall.	4 ft., „ Longwall and Stoop and room.
„ ...	Splint Coal, 3 ft. 8 in., } worked Stoop and	6 ft., „ Stoop and room.
„ ...	Virgin Coal, 2 ft. 4 in., } room and longwall.	
Inclination, ...	1 in 12.	1 in 8.
Type of Rails, ...	Bridge Rails.	Bridge Rails.
Gauge of Rails, ...	2 ft. 4½ in.	2 ft. 4½ in.
Mode of Haulage, ...	Manual, horse, and bogie system of endless rope.	Manual, horse, bogie system of endless rope, and self-acting inclines.

Details of Hutch, Auchinraith and North Motherwell Collieries—

Tare, ...	4½ cwt.	Slots, oak, ...	3½ in. by 1¾ in.
Net, water measure, ...	9½ cwt.	Starts, iron, angle iron on fast end,	2 in. by ⅜ in.
„ as usually filled, ...	11½ cwt.	Flat iron on hanging side,	2 in. by ⅝ in.
Length of Hutch, inside, ...	4 ft. 6 in.	„ other side,	2 in. by ½ in.
Width „ „	2 ft. 8 in.	Door Hinge Bands, ...	2 ft. 2 in. by 2 in. by ⅜ in.
Depth „ „	1 ft. 9 in.	Hinge Bands on hanging side,	2 ft. 4 in. by 2in. by ⅜ in.
Wheels, diameter, ...	9½ in.	Cleading, larch, ...	1 in. thick.
„ between centres, ...	1 ft 3 in.	Drawbars, ...	2 in. by ⅞ in.
Trams, larch, ...	4 ft. 10 in. by 4½ in. by 3½ in.	Axles, ...	1⅜ in diameter
„ „ doubling,	1 ft. 3 in. by 4½ in. by 2 in.		

Archd. Baird & Son's Estimate of Cost, £3 5 0 | Hurst, Nelson & Coy.'s Estimate of Cost, £2 18 6

HUTCH USED AT AUCHINRAITH & NORTH MOTHERWELL COLLIERIES.

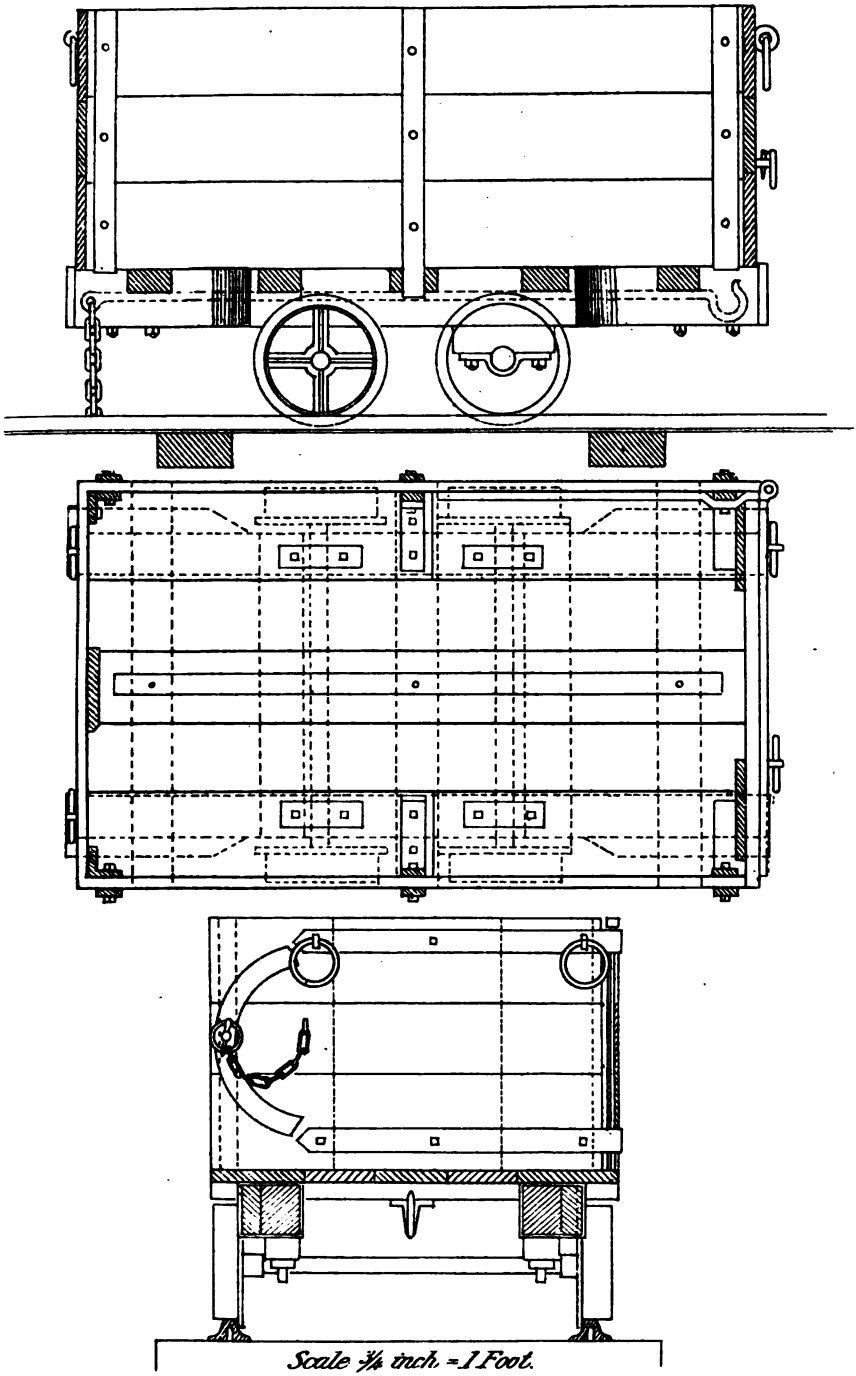

Scale 3/4 inch = 1 Foot.

EXPLANATION RELATIVE TO PLATE XV.

Name of Colliery, ...	AYR COLLIERY.
Owners, ...	GEORGE TAYLOR & CO.
Height of Seam, ...	6 ft. 6 in.
Mode of Working, ...	Stoop and room.
Inclination, ...	1 in 5.
Type of Rails, ...	Tram Rails.
Gauge of Rails, ...	2 ft. 5½ in.
Mode of Haulage, ...	Manual, horse, and dook rope.
Details of Hutch—	
Tare, ...	3½ cwt.
Net, water measure, ...	6½ cwts.
„ as usually filled, ...	10 cwts.
Length of Hutch, inside, ...	4 ft. 1 in.
Width „ „	2 ft. 3 in.
Depth „ „	1 ft. 6 in.
Wheels, cast steel, diameter, ...	1 ft.
„ „ between centres, ...	1 ft. 6½ in.
Trams, oak, ...	4 ft. 7 in. by 4 in. by 3½ in.
Slots, „	3 in. by 1⅝ in.
Starts, „ ...	3¾ in. by 1¾ in., steel angles, 3 in. by 3 in. by ¼ in., and mid starts, iron, 1½ in. by ⅜ in.
Cleading, larch, ...	1 in. thick.
Drawbars, steel ends, ...	2¼ in. by ⅝ in.
Axles, steel, ...	1⅜ in. diameter.

Archd. Baird & Son's Estimate of Cost, ...	£2 15 0
Hurst, Nelson & Coy.'s „ ...	2 5 6

HUTCH USED AT AYR COLLIERY.

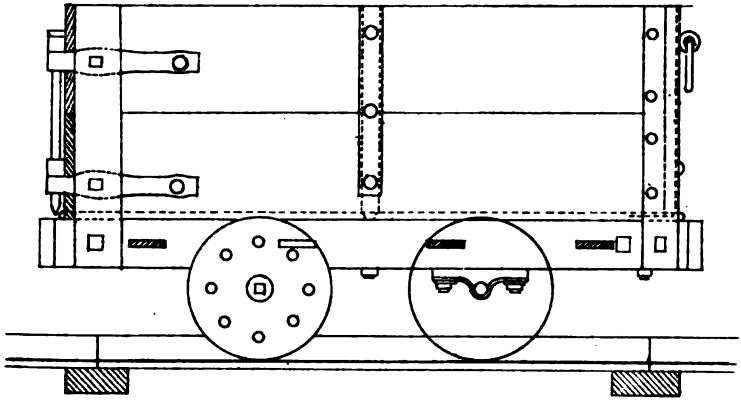

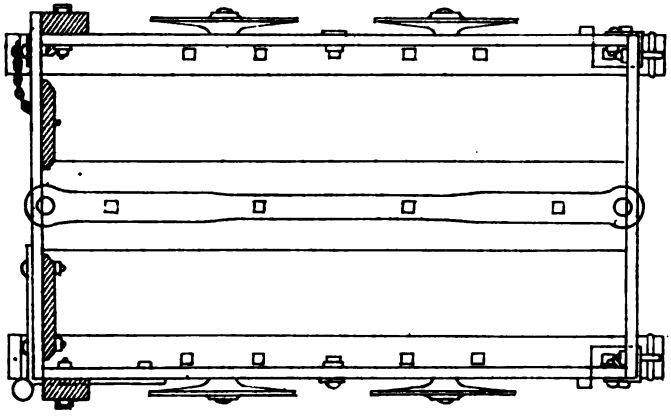

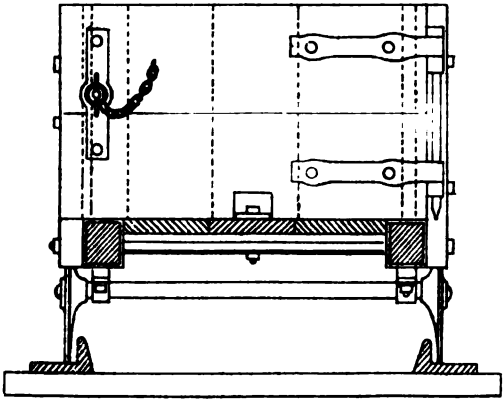

Scale 3/4 inch = 1 Foot.

EXPLANATION RELATIVE TO PLATE XVI.

Name of Colliery, ...	BENT AND PALACE, HAMILTON.
Owners, ...	BENT COLLIERY CO. (LIMITED).
Height of Seams, ...	5 ft. 6 in. and 4 ft. 2 in.
Mode of Working, ...	Stoop and room and Longwall.
Inclination, ...	1 in 18.
Type of Rails, ...	Bridge Rails.
Gauge of Rails, ..	Bent, 2 ft. 1½ in. ; Palace, 2 ft. 0 in.
Mode of Haulage, ...	Manual, horse, and jigger system of endless rope.

Details of Hutch—

Tare, ...	5 cwts.
Net, water measure, ...	10 cwts.
„ as usually filled, ...	12 cwts.
Length of Hutch, inside, ...	4 ft. 3 in.
Width, „ „	3 ft.
Depth, „ „	1 ft. 10 in.
Wheels, diameter, ...	10½ in.
„ between centres, ...	1 ft. 7 in.
Trams, larch, ...	4 ft. 9 in. by 5 in. by 3 in.
Slots, oak, ...	3 in. by 2 in.
Starts, iron, ...	2 in. by ½ in.
Cleading, larch, ...	1 in. thick.
Drawbars, ...	2½ in. by ⅜ in.
Axles, steel, ...	1½ in. diameter.

Archd. Baird & Son's Estimate of Cost, ...	£4 12 6
Hurst, Nelson & Coy.'s „ ...	3 2 6

HUTCH USED AT BENT COLLIERIES, HAMILTON.

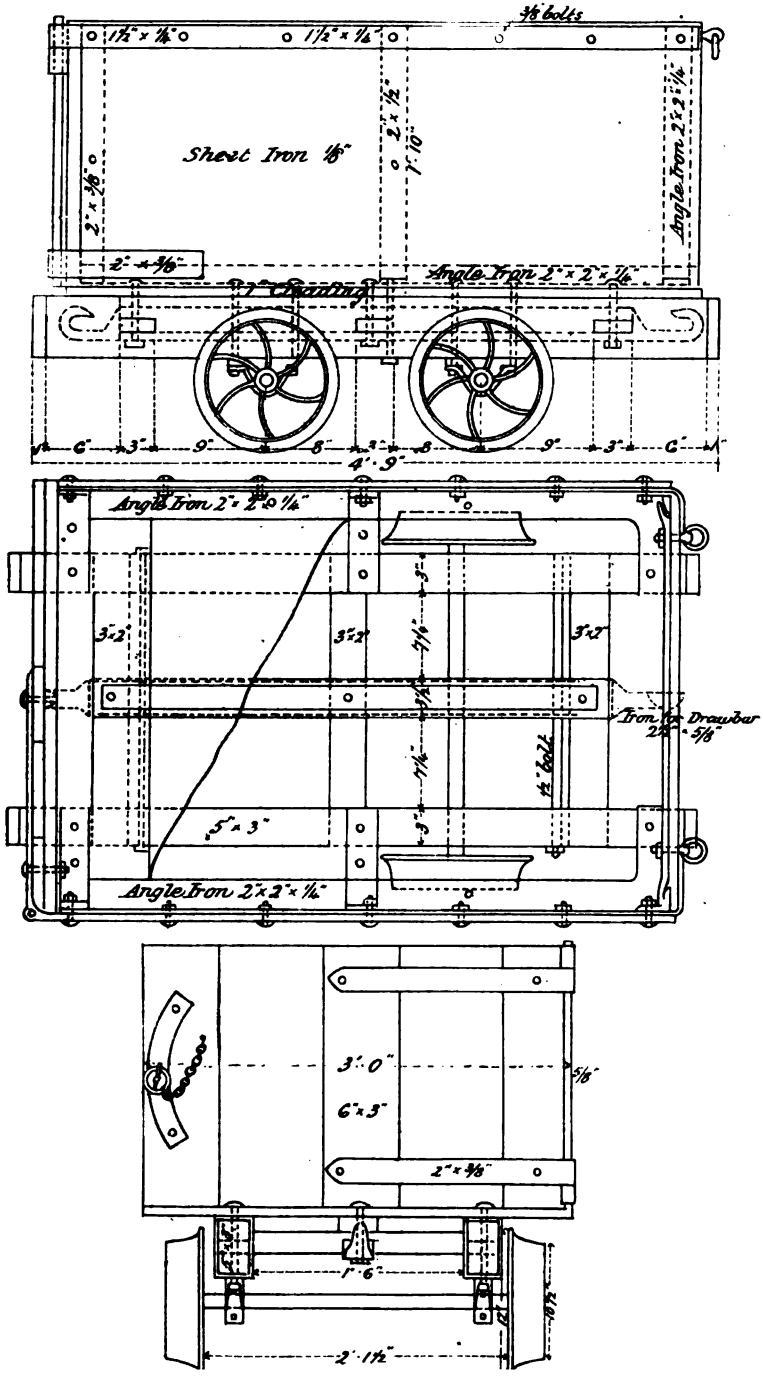

EXPLANATION RELATIVE TO PLATE XVII.

Name of Colliery, ...	BINNIEHILL, SLAMANNAN.
Owners, ...	JOHN WATSON (LIMITED).
Height of Seam, ...	2 ft.
Roads brushed to a height of	5 ft.
Mode of Working, ...	Longwall.
Inclination, ...	Nearly level.
Type of Rails, ...	Bridge Rails.
Gauge of Rails, ...	2 ft.
Mode of Haulage,	Manual, horse, and jigger system of endless rope.

Details of Hutch—

Tare, ...	3 cwts.
Net, water measure, ...	About 4 cwts.
„ as usually filled, ...	8 cwts.
Length of Hutch, inside, ...	3 ft. 9 in.
Width „ „	2 ft. 8 in.
Depth „ „	1 ft.
Wheels, steel, diameter, ...	10 in.
„ between centres, ...	1 ft. 1 in.
Trams, oak, ...	4 ft. by $4\frac{3}{4}$ in. by $2\frac{3}{4}$ in.
Slots, oak, ...	1 ft. 9 in. by $3\frac{1}{2}$ in. by $2\frac{1}{2}$ in.
Cleading, larch, ...	$1\frac{1}{8}$ in. thick.
Drawbars, ...	$\frac{3}{4}$ in. diameter.
Axles, ...	$1\frac{1}{4}$ in. diameter.

Archd. Baird & Son's Estimate of Cost, ...	£2	9	6
Hurst, Nelson & Coy.'s „ ...	2	2	6

HUTCH USED AT BINNIEHILL COLLIERY, SLAMANNAN.

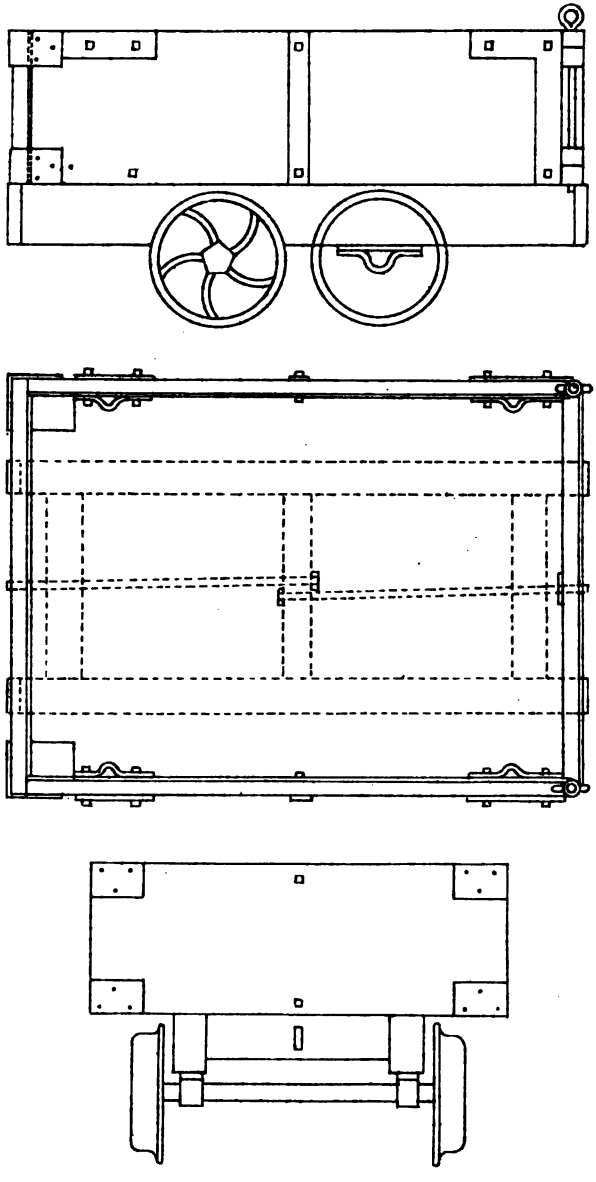

Scale 3/4 inch = 1 Foot.

EXPLANATION RELATIVE TO PLATE XVIII.

Name of Colliery, ...	BLANTYRE COLLIERY, BLANTYRE.
Owners, ...	WM. DIXON (LIMITED).
Height of Seam, ...	4 ft.
Mode of Working, ...	Longwall.
Inclination, ...	1 in 13.
Type of Rails, ...	Edge rails, F.B. mall. iron, 20 lb. per yd.
Gauge of Rails, ...	2 ft.
Mode of Haulage,	Manual, horse, single rope (direct system).

Details of Hutch—

Tare, ...	$4\frac{1}{2}$ cwts.
Net, water measure, ...	$9\frac{3}{4}$ cwts.
„ as usually filled, ...	11 cwts.
Length of Hutch, inside, ...	4 ft. 4 in.
Width „ „	2 ft. 9 in.
Depth „ „	1 ft. 9 in.
Wheels, cast steel, flanged, ...	dia. 11 in. by 2 in. tread (outside bearings).
Wheels, between centres, ...	1 ft. 6 in.
Trams, larch, ...	4 ft. 11 in. by $4\frac{3}{4}$ in. by $3\frac{1}{2}$ in.
Slots, oak, ...	$3\frac{1}{2}$ in. by $2\frac{1}{2}$ in.
Starts, ...	angle iron, 2 at 3 in. by 3 in. by $\frac{3}{8}$ in. and 4 at $1\frac{1}{2}$ in. by $\frac{3}{8}$ in. from centre to top, and increased in section from centre to bottom.
Cleading, larch, ...	$\frac{7}{8}$ in. thick.
Drawbars, ...	$2\frac{1}{4}$ in. by $\frac{5}{8}$ in.
Axles, ...	dia., $1\frac{3}{8}$ in. at bearings.

Archd. Baird & Son's Estimate of Cost, ...	£3 15 0
Hurst, Nelson & Coy.'s „ ...	2 19 0

HUTCH USED AT BLANTYRE COLLIERY, BLANTYRE.

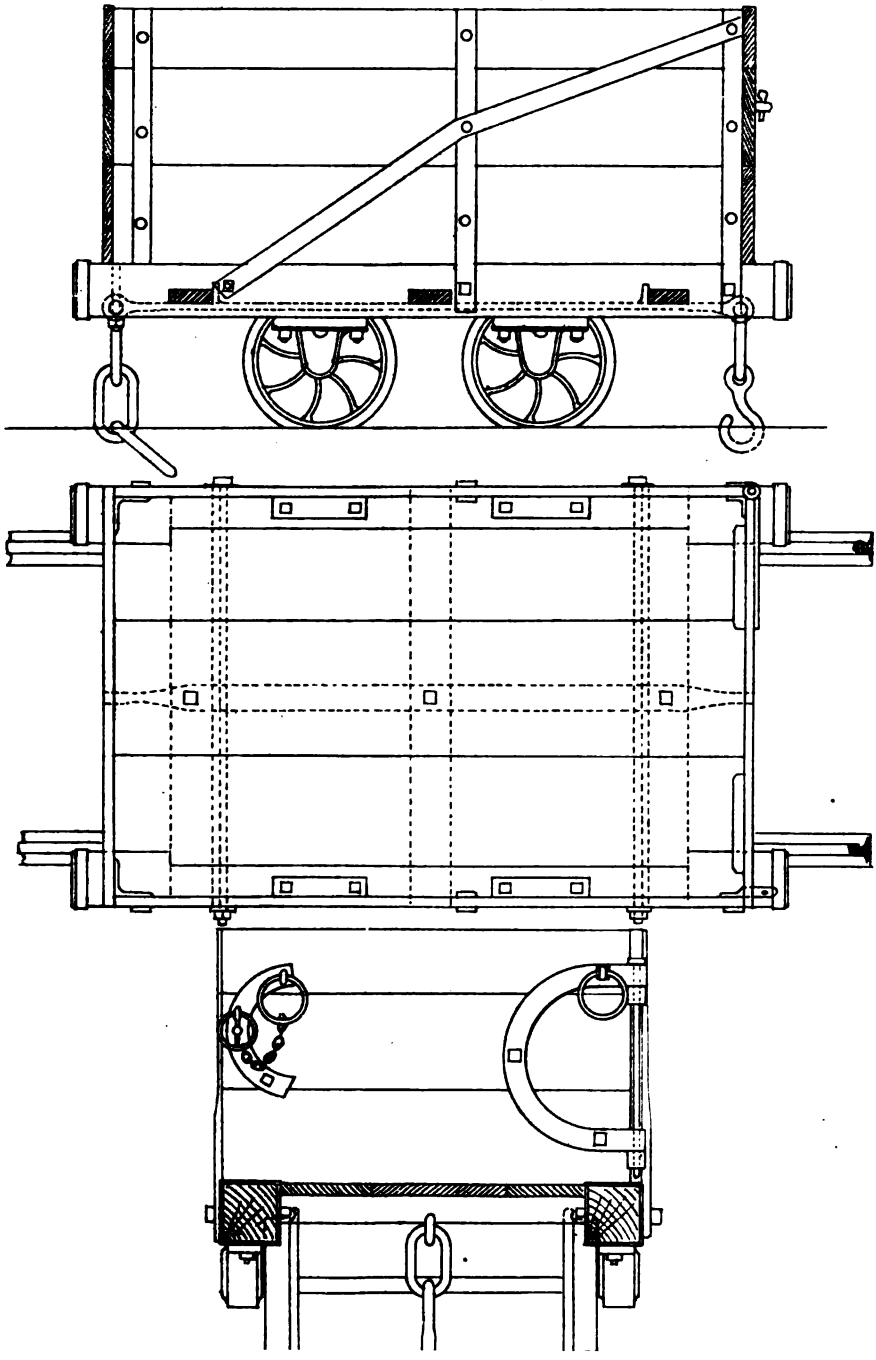

EXPLANATION RELATIVE TO PLATE XIX.

Name of Colliery, ...	BOGHEAD, BATHGATE.
Owners, ...	———
Height of Seam, ...	3 ft.
Mode of Working, ...	Longwall.
Inclination, ...	1 in 9.
Type of Rails, ...	Tram Rails.
Gauge of Rails, ...	2 ft. 5½ in.
Mode of Haulage, ...	Manual, horse, bogie system of endless rope, and tail rope.
Details of Hutch—	
Tare, ...	4 cwts.
Net, water measure, ...	9 cwts.
„ as usually filled, ...	10 cwts.
Length of Hutch, inside, ...	4 ft. 2½ in.
Width „ „ at top, ...	2 ft. 9 in.
„ „ „ at bottom, ...	2 ft. 2½ in.
Depth „ „	1 ft. 9 in.
Wheels, diameter, ...	1 ft.
„ between centres, ...	1 ft. 5 in.
Trams, oak, ...	4 ft. 10 in. by 3 in. by 3 in., shod with iron, 2½ by ¼ in.
Slots, „	3 in. square.
Starts, iron, ...	2 in. by ½ in. ; corners 2 in. angle iron.
Cleading, steel plates, ...	Bottoms, ⅛ in. ; sides and ends $\frac{3}{32}$ in.
Drawbars, ...	2 in. by ½ in., enlarged 5 inches on each end to 2½ in. by ⅝ in.
Axles, ...	1⅜ in. dia.
Top Rail, ...	1½ in. by ½ in.

Archd. Baird & Son's Estimate of Cost, ...	£3 17 6
Hurst, Nelson & Coy.'s „ ...	2 13 6

HUTCH USED AT BOGHEAD COLLIERY, BATHGATE.

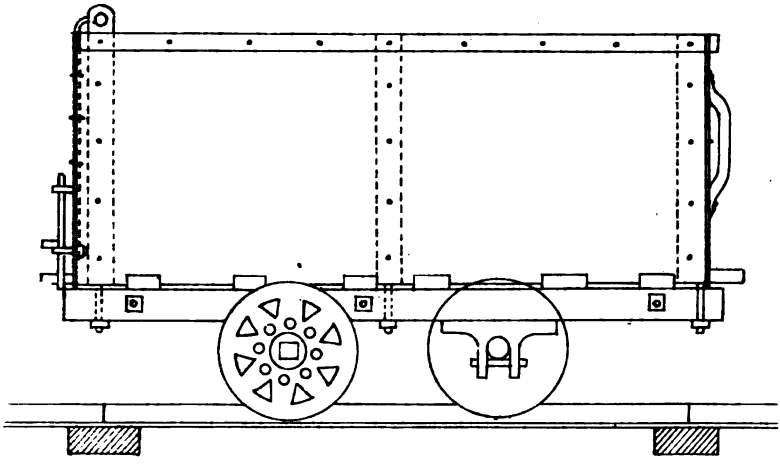

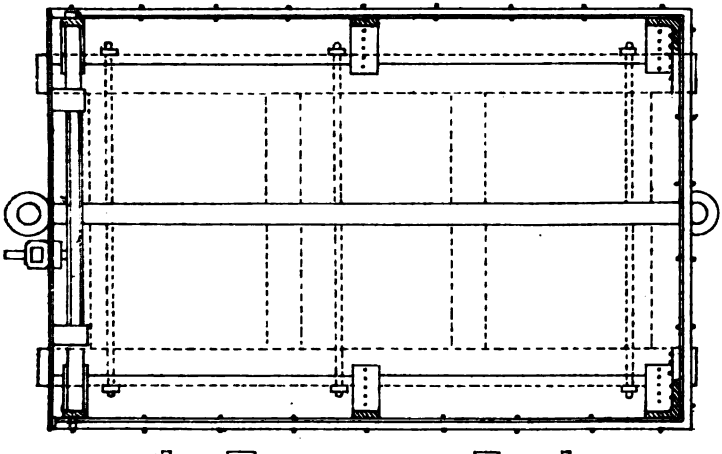

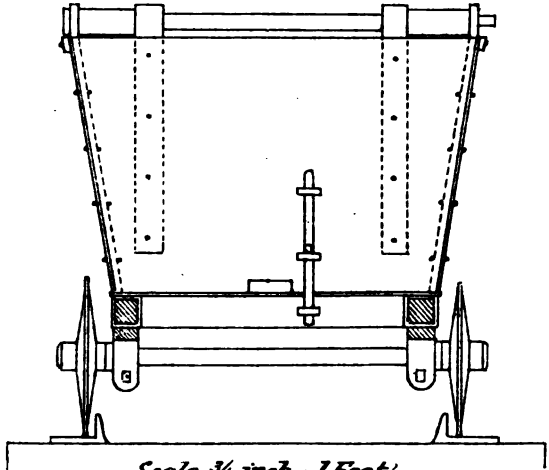

Scale 3/4 inch = 1 Foot.

EXPLANATION RELATIVE TO PLATE XX.

Name of Colliery, ...	BOTHWELL CASTLE, BOTHWELL.
Owners, ...	WM. BAIRD & CO.
Height of Seam, ...	4ft. 6in.
Mode of Working, ...	Longwall and Stoop and room.
Inclination, ...	1 in 10 to 1 in 40.
Type of Rails, ...	Bridge Rails.
Gauge of Rails, ...	2 ft.
Mode of haulage, ...	Manual, horse, and endless rope.
Details of Hutch—	
Tare, ...	5¼ cwts.
Net, water measure, ...	9 cwts.
Net, as usually filled, ...	9½ cwts.
Length of Hutch inside, ...	4 ft. 1½ in.
Width „ „	2 ft. 9 in.
Depth „ „	1 ft. 10 in.
Wheels, diameter, ...	9 in.
„ between centres, ...	1 ft. 6 in.
Trams, larch, ...	4 ft. 6 in. by 4 in. by 3 in.
Slots, oak, ...	2 ft. 11 in. by 4½ in. by 1¾ in.
Starts, angle steel, ...	2 ft. 2 in. by 3 in. by 3 in. by ¼ in.
Cleading, larch, ...	Bottoms, 1 in. ; Sides and ends, ⅞ in.
Drawbars, ...	4 ft. 3 in. by 2½ in. by ⅝ in.
Axles, ...	1⅜ in. square.

Archd. Baird & Son's Estimate of Cost, ...	£3 9 6
Hurst, Nelson & Coy.'s „ ...	2 12 6

HUTCH USED AT BOTHWELL CASTLE COLLIERY, BOTHWELL.

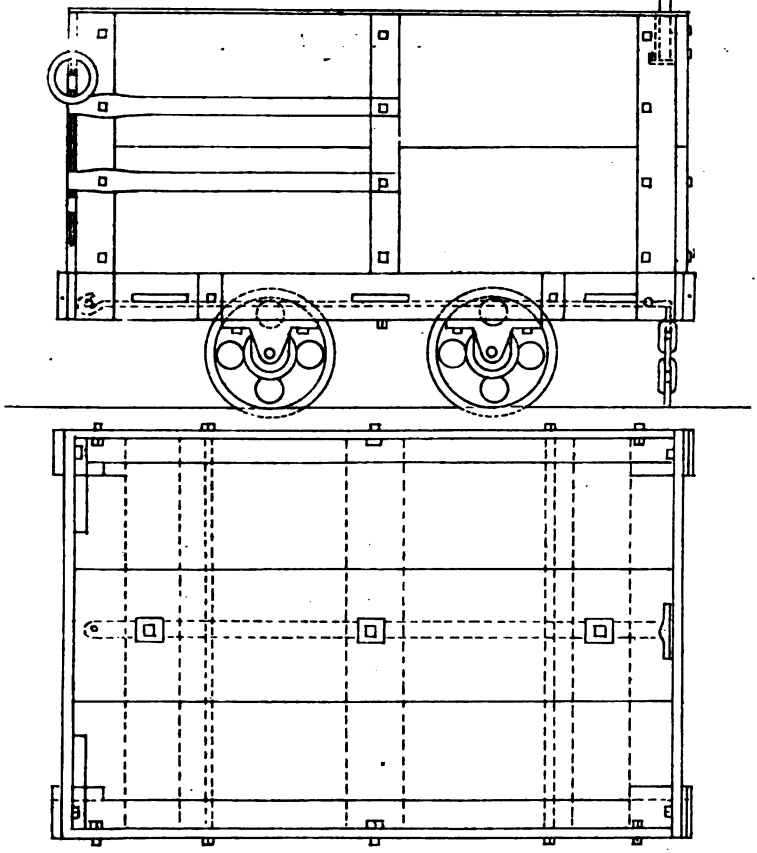

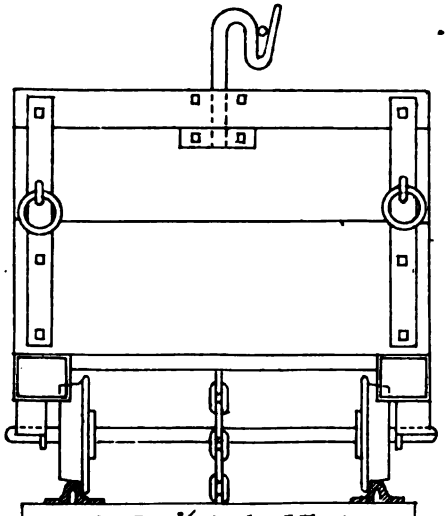

Scale. 3/4 inch = 1 Foot.

EXPLANATION RELATIVE TO PLATE XXI.

Name of Colliery,	...CADDER IRONSTONE PITS, BISHOPBRIGGS.
Owners, ...	...CARRON COMPANY.
Height of Seam, ...	4 ft.
Mode of Working, ...	Longwall.
Inclination, ...	1 in 3 to 1 in 6.
Type of Rails, ...	Tram Rails.
Gauge of Rails, ...	1 ft. 4 in.
Mode of Haulage, ...	Single rope.
Details of Hutch—	
Net, water measure, ...	3½ cwts.
Net, as usually filled, ...	17½ cwts. (ironstone).
Length of Hutch inside, ...	3 ft. 9½ in.
Width ,, ,, ...	2 ft. 8 in.
Depth ,, ,, ...	1 ft. 6 in.
Wheels, diameter, ...	10 in.
,, between centres, ...	1 ft. 6 in.
Trams, wrought iron, ...	4 ft. 4 in. by 2¾ in. by 2 in. by ⅜ in.
Slots, ...	
Starts, ...	
Cleading, steel plates, ...	No. 11 Gauge.
Drawbars, ...	
Axles, ...	1⅜ diameter.

Archd. Baird & Son's Estimate of Cost, ...	£4 15 6
Hurst, Nelson & Coy.'s ,, ...	3 10 6

HUTCH USED AT CADDER COLLIERIES, BISHOPBRIGGS.

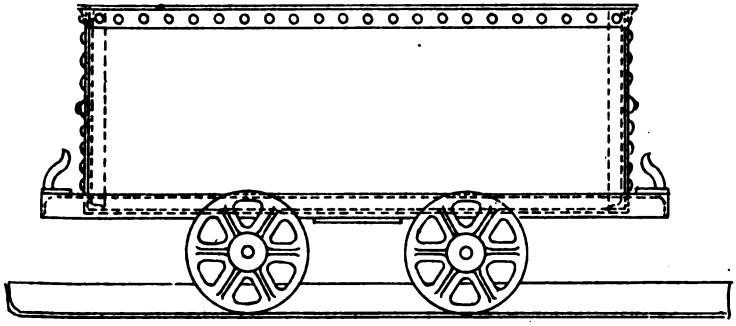

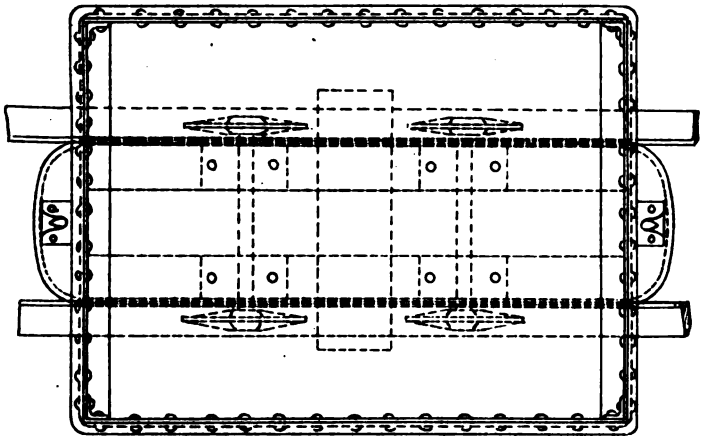

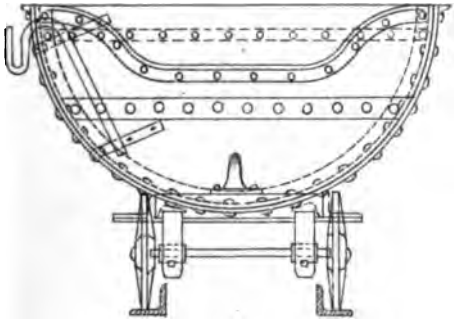

Scale. 3/4 inch = 1 Foot.

EXPLANATION RELATIVE TO PLATE, XXII.

Name of Colliery, ...	... CADZOW COLLIERY, HAMILTON.
Owners,...	... CADZOW COAL COY. (LIMITED).
Height of Seam,	Total Height, 5ft. 8in. ; 4ft. 0in. being worked.
Mode of Working, ...	Stoop and room.
Inclination, ...	1 in 30 to 1 in 80.
Type of Rails, ...	Bridge Rails.
Gauge of Rails, ...	1 ft. 9¼ in.
Mode of Haulage, ...	Manual, horse, and bogie system of endless rope.

Details of Hutch—

Tare, ...	5¾ cwts.
Net, water measure, ...	
„ as usually filled, ...	13 to 15 cwts.
Length of Hutch, inside, ...	5 ft.
Width „ „	3 ft.
Depth „ „	1 ft. 6½ in.
Wheels, diameter, ...	11 in.
„ between centres, ...	1 ft. 7 in.
Trams, larch, ...	5 ft. 5 in. by 5 in., by 4¼ in.
Doublings, larch, ...	1 ft. 4 in. by 2 in., by 4¼ in.
Slots, oak, ...	3½ in. by 3 in.
Iron Plates, for sides, ends, and bottom, ...	⅛ in. thick.
Angle Iron, ...	1½ in. by 1½ in.
Drawbars, ...	2½ in. by ⅝ in.
Axles, ...	Round at ends, 1⅝ in. square, chamfered.

Archd. Baird & Son's Estimate of Cost, ...	£5 12 6
Hurst, Nelson & Coy.'s „ ...	3 8 6

HUTCH USED AT CADZOW COLLIERY, HAMILTON.

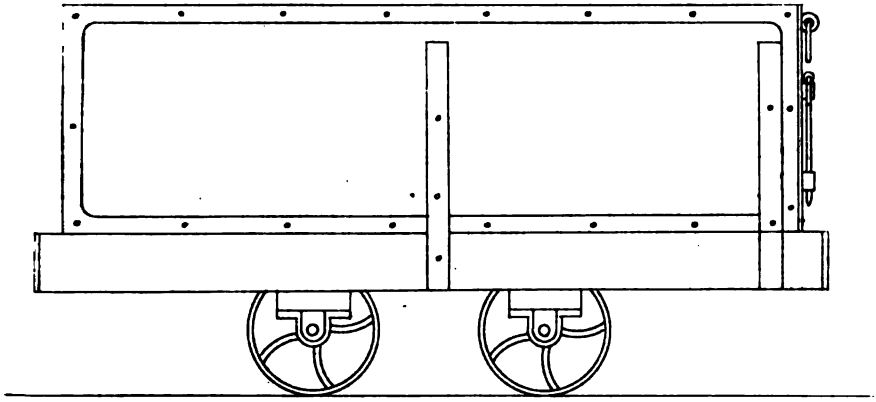

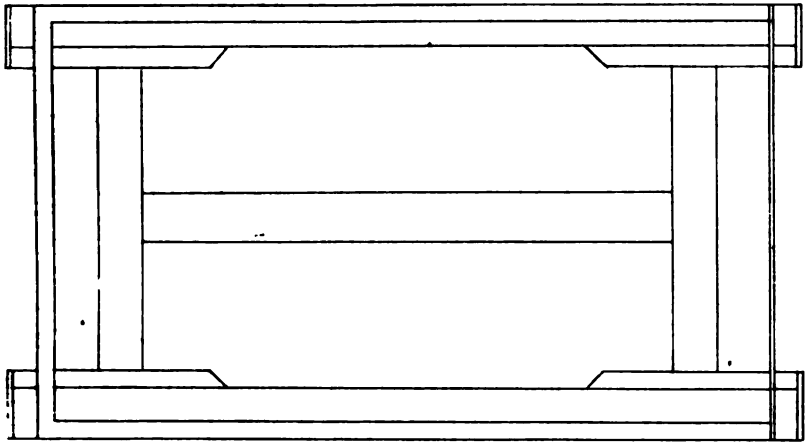

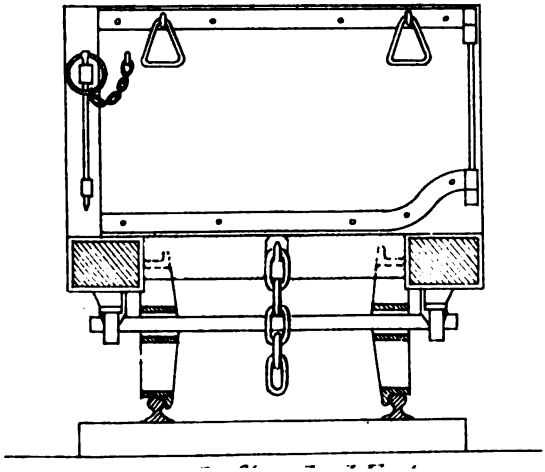

EXPLANATION RELATIVE TO PLATE XXIII.

Name of Colliery, ...	CARRONHALL, FALKIRK.
Owners, ...	CARRON COMPANY.
Height of Seam, ...	3 ft. 6 in. to 4 ft.
Mode of Working, ...	Stoop and room.
Inclination, ...	Flat.
Type of Rails, ...	Tram Rails.
Gauge of Rails, ...	2 ft. 5 in.
Mode of Haulage, ...	Tail-rope.
Details of Hutch—	
Tare, ...	$3\frac{1}{4}$ cwt.
Net, water measure, ...	$6\frac{1}{2}$ cwt.
„ as usually filled, ...	8 cwt. (coal).
Length of Hutch, inside, ...	3 ft.
Width „ „	2 ft. 7 in.
Depth „ „	1 ft. 6 in.
Wheels, diameter, ...	10 in.
„ between centres, ...	1 ft. 6 in.
Trams, larch, ...	3 ft. by 5 in., by 3 in.
Slots, ...	
Starts, wrought iron, ...	$2\frac{1}{2}$ in. by $\frac{1}{2}$ in.
Cleading, larch, ...	1 in. thick.
Drawbars, ...	2 in. by $\frac{5}{8}$ in.
Axles, ...	$1\frac{3}{8}$ in diameter.

Archd. Baird & Son's Estimate of Cost, ...	£2 0 0
Hurst, Nelson & Coy.'s „ ...	1 19 0

HUTCH USED AT CARRONHALL COLLIERY, FALKIRK.

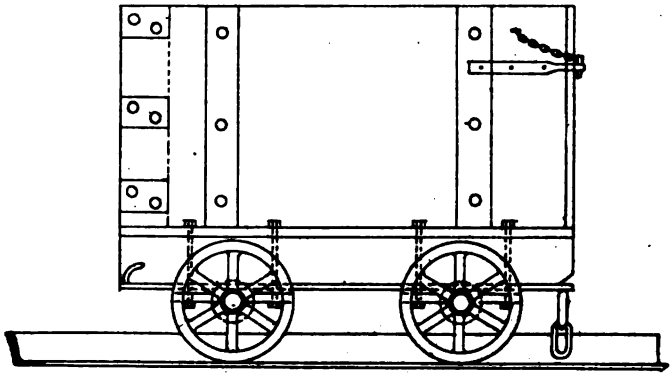

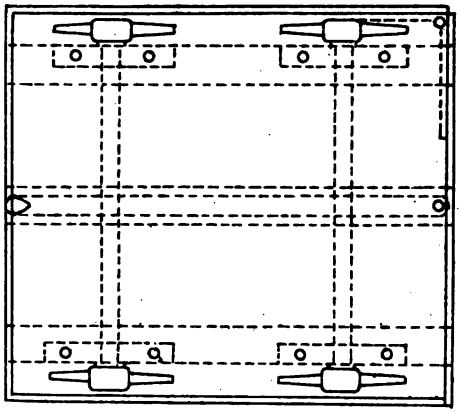

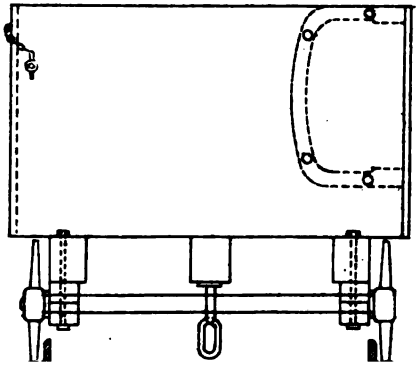

EXPLANATION RELATIVE TO PLATE XXIV.

Name of Colliery, ...	COLTNESS AND OTHERS.
Owners, ...	COLTNESS IRON COY. (LIMITED).
Height of Seam, ...	2 ft. to 10 ft.
Mode of Working, ...	Longwall and Stoop and room.
Inclination, ...	1 in 3 to level.
Type of Rails, ...	Bridge.
Guage of Rails, ...	2 feet.
Mode of Haulage, ...	Any mode.
Details of Hutch—	
Tare, ...	5½ cwts.
Net, water measure, ...	9 cwts.
„ as usually filled, ...	10 to 12 cwts.
Length of Hutch inside, ...	4 ft.
Width „ „	3 ft.
Depth „ „	1 ft. 6 in.
Wheels, diameter, ...	11 in.
Wheels, between centres, ...	1 ft. 4 in.
Trams, larch, ...	4 ft. 6 in. by 4½ in. by 3½ in.
Slots, larch, ...	4 in. by 2 in.
Angle Irons, ...	2 in. by 2 in. by ¼ in.
Steel Sides, ...	⅛ in. thick.
Steel Bottom, ...	$\frac{3}{16}$ in thick.
Drawbars, iron, ...	2 in. by ⅜ in.
Axles, steel, ...	1½ in. diameter.
Pedestals, ...	Hardy Patent Pick Coy's.

Archd. Baird & Son's Estimate of Cost, ...	£5	7	6
Hurst, Nelson & Coy.'s „ ...	3	2	0

HUTCH USED AT COLINESS IRON Coy's COLLIERIES.

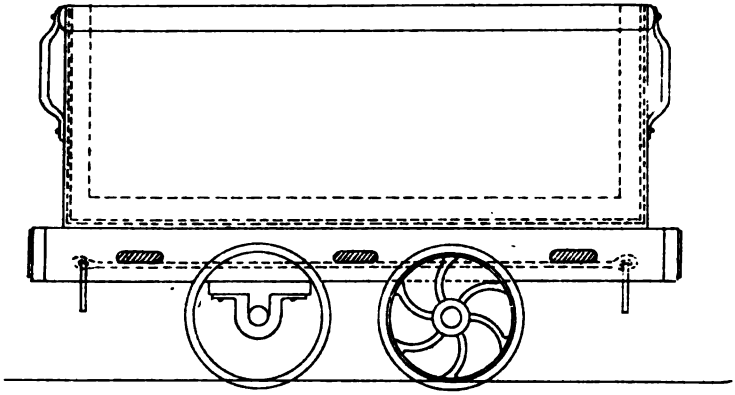

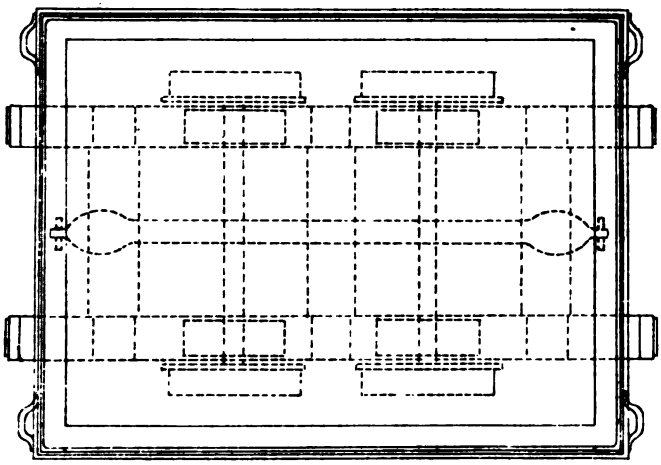

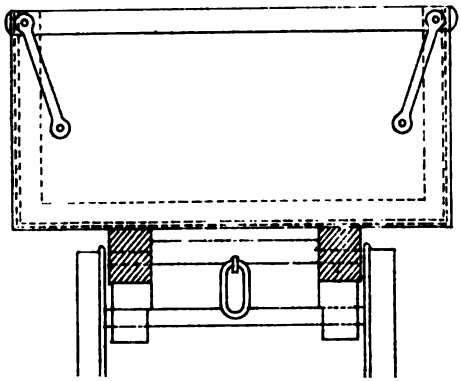

EXPLANATION RELATIVE TO PLATE XXV.

Name of Colliery, ...	DALBEATH.
Owners, ...	THE FIFE COAL COY. (LIMITED).
Height of Seam, ...	4 ft.
Mode of Working, ...	Longwall.
Inclination, ...	1 in 10 to 1 in 12.
Type of Rails, ...	Bridge Rails, 14 lbs per yard.
Gauge of Rails, ...	24 in.
Mode of Haulage, ...	Manual, horse, bogie system of endless rope.
Details of Hutch—	
Tare, ...	$4\frac{3}{4}$ cwts. 21 lbs.
Net, water measure, ...	$8\frac{3}{4}$ cwts.
„ as usually filled, ...	10 to 14 cwts.
Length of Hutch inside, ...	4 ft. $1\frac{3}{4}$ in.
Width „ „	2 ft. $10\frac{3}{4}$ in.
Depth „ „	1 ft. 6 in.
Wheels, diameter, ...	$12\frac{1}{2}$ in.
„ between centres, ...	1 ft. 6 in.
Trams, ...	4 ft. 7 in. by $5\frac{1}{8}$ in. by $3\frac{1}{2}$ in., oak or elm.
Slots, ...	Elm or ash, 4 in. by 2 in.
Starts, ...	None.
Cleading, larch, ...	$1\frac{1}{8}$ in.
Drawbars, ...	$2\frac{1}{2}$ in. by $\frac{5}{8}$ in.
Axles, ...	$1\frac{1}{2}$ in. diameter.

Archd. Baird & Son's Estimate of Cost, ...	£2 10 0
Hurst, Nelson & Coy.'s „ ...	2 12 6

HUTCH USED AT DALBEATH COLLIERY, FIFESHIRE.

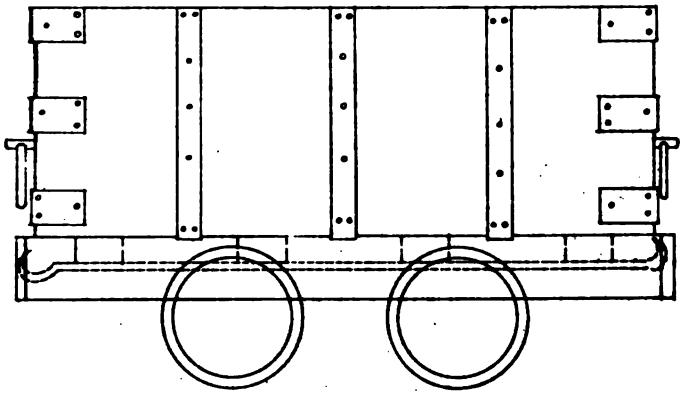

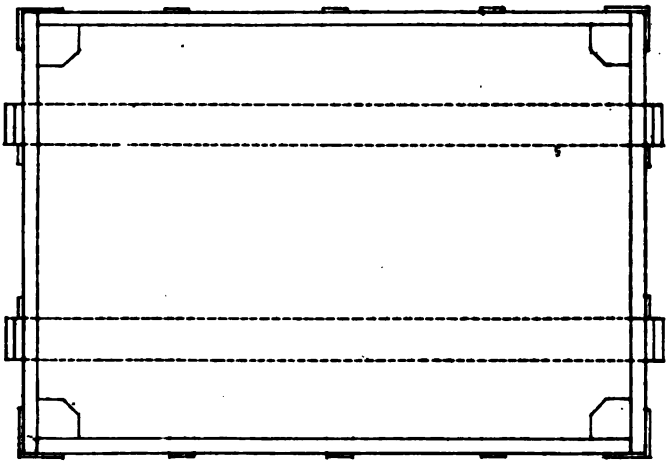

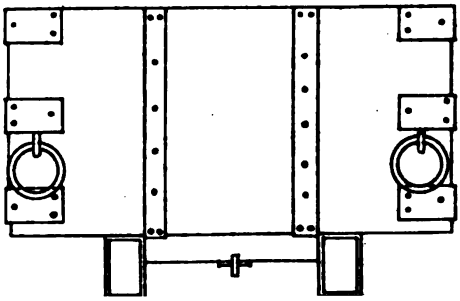

EXPLANATION RELATIVE TO PLATE XXVI.

Name of Colliery, ...	DECHMONT, NEWTON.
Owners, ...	DECHMONT COLLIERY CO. (LIMITED).
Height of Seam, ...	3 ft. 6 in.
Mode of Working, ...	Longwall.
Inclination, ...	1 in 3.
Type of Rails, ...	Bridge Rails.
Gauge of Rails, ...	2 ft.
Mode of Haulage, ...	Inclines and cuddie braes.
Details of Hutch—	
Tare, ...	4¼ cwts.
Net, water measure, ...	7 cwts.
„ as usually filled, ...	9 cwts.
Length of Hutch inside, ...	4 ft. 7 in.
Width, „ „	2 ft. 6 in.
Depth, „ „	1 ft. 6 in.
Wheels, diameter, ...	10 in.
„ between centres, ...	1 ft. 7 in.
Trams, larch, ...	5 ft. 1 in. by 5 in. by 3 in.
Starts, iron, ...	2 end ones 2 in. angle iron ; centre one, 2 in. by ½ in. flat iron.
Cleading larch, ...	1 in. thick.
Drawbars, ...	2½ in. by ⅝ in.
Axles, ...	1⅜ in. dia.

Archd. Baird & Son's Estimate of Cost, ...	£3 9 6
Hurst, Nelson & Coy.'s „ ...	2 14 0

HUTCH USED AT DECHMONT COLLIERY, CAMBUSLANG.

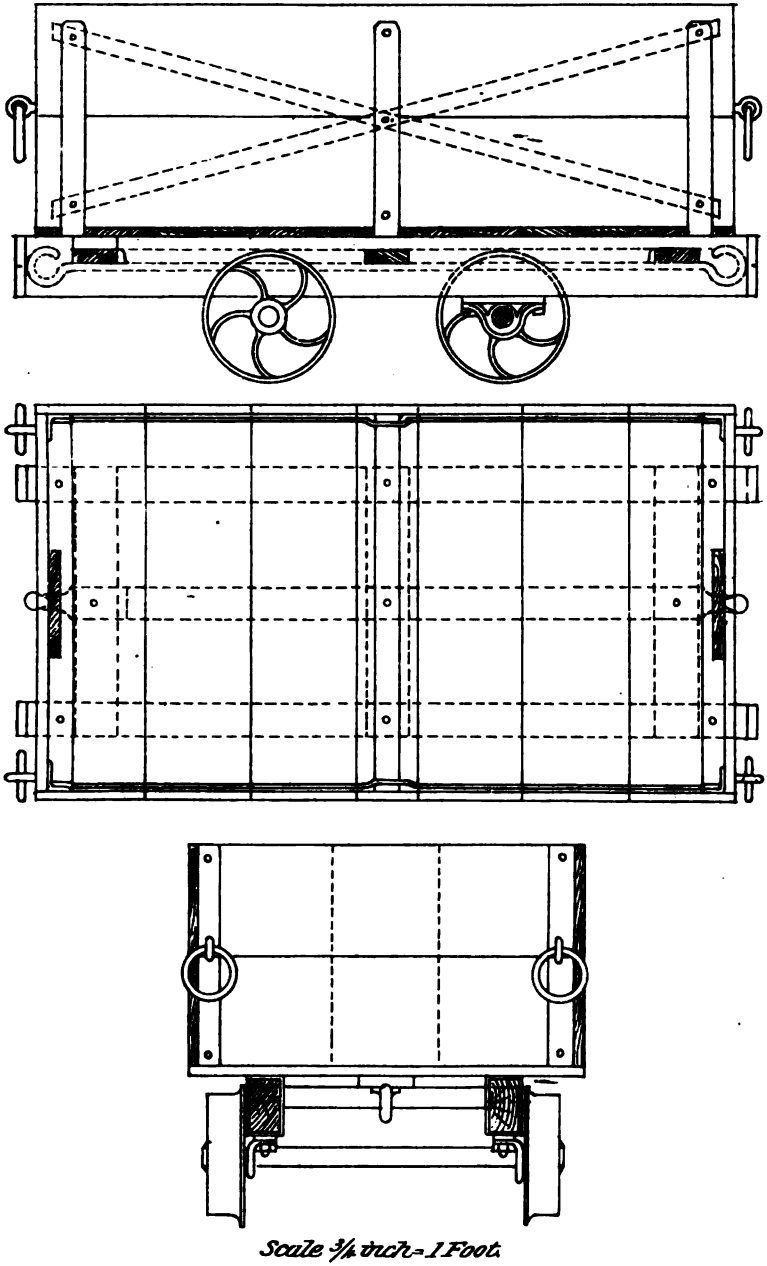

Scale 3/4 inch = 1 Foot.

EXPLANATION RELATIVE TO PLATE XXVII.

Name of Colliery, ...	DEVON, ALLOA.
Owners, ...	ALLOA COAL COMPANY.
Height of Seam, ...	5 ft. 6 in.
Mode of Working, ...	Stoop and room.
Inclination, ...	1 in 4.
Type of Rails, ...	Bridge Rails.
Gauge of Rails, ...	1 ft. 9 in.
Mode of Haulage, ...	Manual, horse, and tail rope.

Details of Hutch—

Tare, ...	4 cwts.
Net, water measure, ...	10¾ cwts.
,, as usually filled, ...	10 cwts.
Length of Hutch inside, ...	4 ft.
Width, ,, ,, ...	3 ft.
Depth, ,, ,, ...	1 ft. 8 in.
Wheels, diameter, ...	10 in.
,, between centres, ...	1 ft. 6 in.
Trams, larch, ...	4 ft. 4½ in. by 5 in. by 3½ in.
Slots, oak, ...	3½ in. by 1½ in.
Starts, larch, ...	3 in. by 3 in.
Cleading, ...	1⅛ in. thick.
Drawbars, ...	3 in. by ⅝ in.
Axles, ...	1¼ in. diameter.

Archd. Baird & Son's Estimate of Cost, ...	£2 5 0
Hurst, Nelson & Coy.'s ,, ...	2 13 6

HUTCH USED AT DEVON COLLIERY, ALLOA.

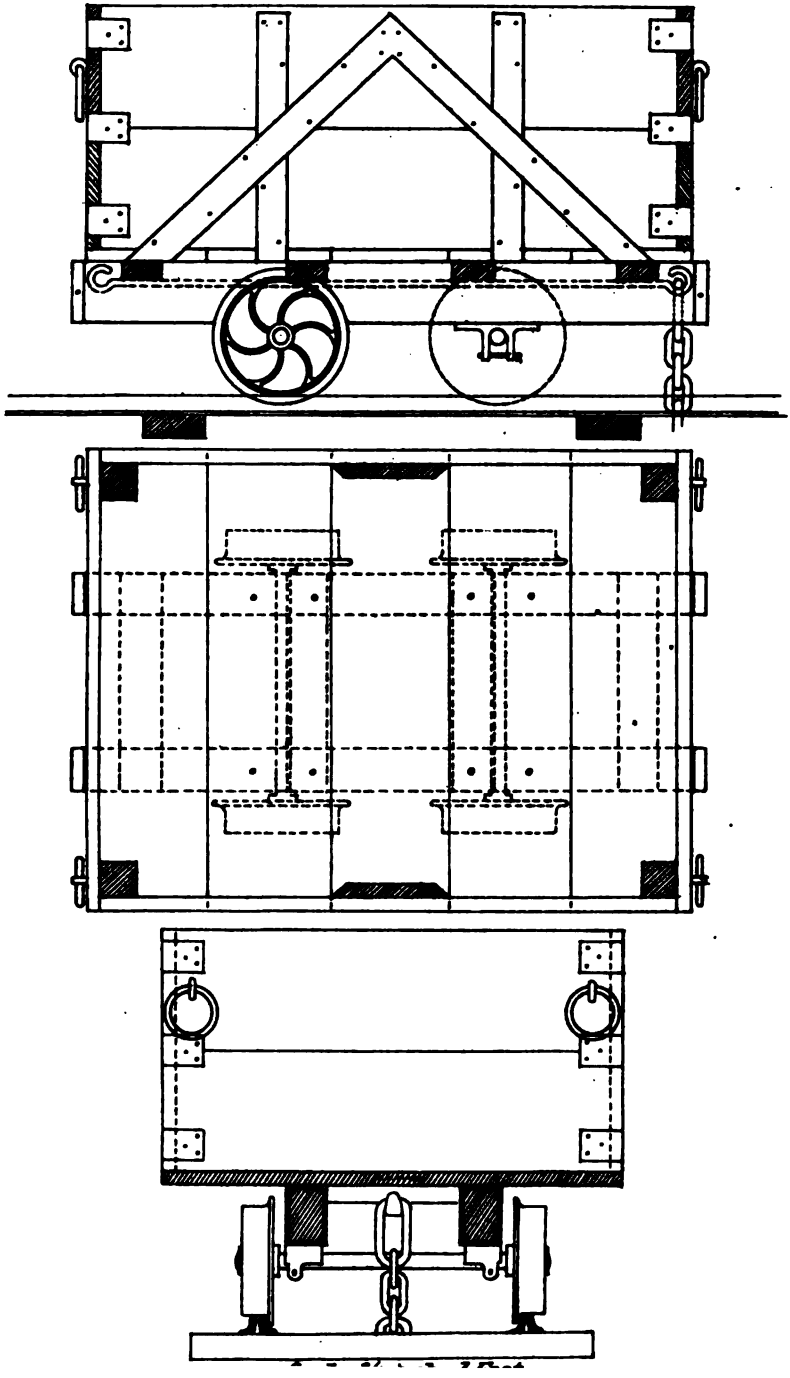

EXPLANATION RELATIVE TO PLATE XXVIII.

Name of Colliery, ...	FARME, RUTHERGLEN.
Owner, ...	ALLAN FARIE.
Height of Seam, ...	2 ft., 2ft. 4 in., and ft.
Mode of Working, ...	Longwall and Stoop and room.
Inclination, ...	1 in 9.
Type of Rails, ...	Cast iron and steel tram rails.
Gauge of Rails, ...	2 ft. 8 in.
Mode of Haulage, ...	Manual, horse, and endless rope.

Details of Hutch—

Length over all, ...	4 ft. 4in.
Inside Sizes—Length,...	4 ft.
Width, ...	at top, 2 ft. 6 in.
	at bottom, 2 ft. 3 in.
Depth, ...	1 ft. 3 in.
Tare of Empty Hutch,...	$2\frac{3}{4}$ cwts.
Carries a Load of Coal.	8 cwts.
Trams, ...	4 ft. 4 in. by $3\frac{1}{2}$ in. by $3\frac{1}{4}$ in. shod at both ends by light M.I. hoop shrunk on.
Slots, ...	2 ft. 2 in. by $3\frac{1}{2}$ by $1\frac{1}{2}$ in. morticed half depth of tram, and frame held together by two $\frac{1}{2}$ in. square bolts.
Starts, ...	1 ft. 6 in. by $3\frac{1}{2}$ in. by $1\frac{1}{2}$ in. Two such on side, one at one end and one in centre. Start at other end for door is angle iron $2\frac{1}{2}$ in. by 2 in. by $\frac{1}{4}$ in. bolted to tram outside.

Cleading—Larch or Scotch fir, $\frac{7}{8}$ in. thick, one board 10 in. deep at bottom of ends and sides, and one of 5 in. deep at top; this for cheapness of renewal when worn. Cleading is nailed on outside of wooden starts and further secured by a strap of $1\frac{1}{2}$ in. hoop iron also nailed to cleading and start by $2\frac{1}{2}$ in. tub nail. End of cleading at door is rivetted to angle iron, a space being left clear to form a slot or groove to receive the door.

Wheels, 14 in. dia., cast steel with 5 spokes, hole in centre round and rimmled; axle, $1\frac{3}{8}$ in. round M.I. full size where it enters wheel, and then reduced and rivetted on outside.

Drawbar, 2 in. by $\frac{1}{2}$ in, reduced at end full strength of iron into hook.

Archd. Baird & Son's Estimate of Cost, ...	£1	19	6
Hurst, Nelson & Coy.'s ,, ...	2	2	6

HUTCH USED AT FARME COLLIERY. RUTHERGLEN.

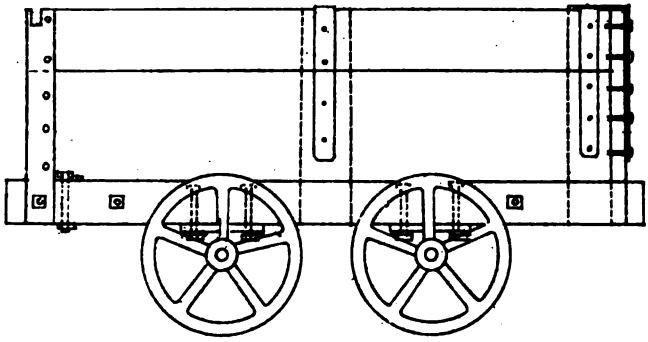

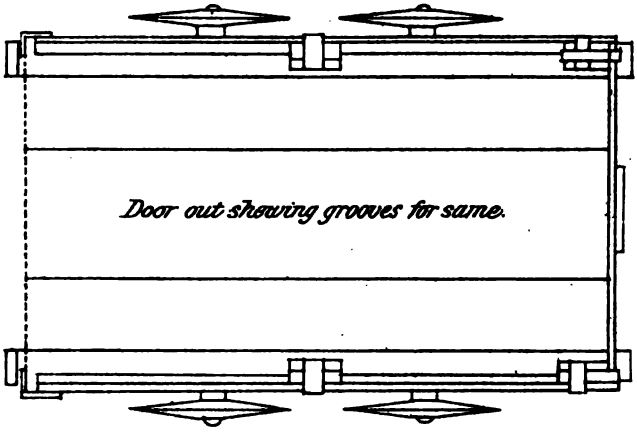

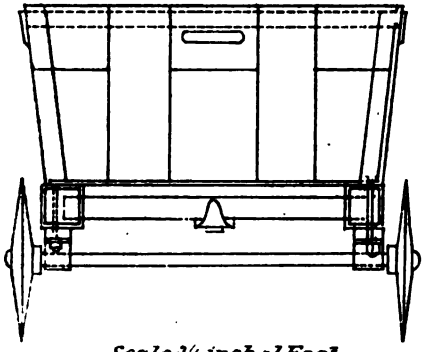

Scale 3/4 inch = 1 Foot.

EXPLANATION RELATIVE TO PLATE XXIX.

Name of Colliery, ...	FENCE, LESMAMAGOW.
Owners, ...	NITSHILL AND LESMAHAGOW COAL COY.
Height of Seam, ...	2 ft. 3 in.
Mode of Working, ...	Longwall.
Inclination—mean, ...	1 in 15
Type of Rails, ...	M.I. Bridge and F.B.
Gauge of Rails, ...	2 ft. 1 in.
Mode of Haulage—on Level, ...	Endless Rope.

Details of Hutch—

Tare, ...	4 cwt. 1 qr.
Net Weight of Coal carried, ...	12 cwt.
Length of Hutch, inside, ...	4 ft. 6½ in.
Width „ „	2 ft. 11½ in.
Depth „ „	1 ft. 4 in.
Wheels (flanged), on Plane, ...	10½ in. diameter.
„ between centres, ...	1 ft. 4½ in.
Trams, Oak, ...	5 ft. by 5¼ in., by 2½ in.
Slots, Oak, ...	6 in. by 1½ in.
Cleading, Larch, ...	Bottom, 1⅛ in., Sides, 1 in.
Centre Drawbar, *f.*, ...	2½ in. by ¾ in.
Two-side „	33 in. centres, *e.e.*, 2 in. by ⅜ in.
Axles, ...	1⅜ in. diameter.
Corner Plates, *a.a.*, ...	3½ in. by ¼ in.
Inside Corners, *b.b.*, ...	2½ in. by 2½ in., by ¼ in.
Centre Straps, projecting 6 in. outside *c.*, ...	2½ in. by ¼ in.
Buffer Hoops, ...	1½ in. by ¼ in.
Washer Plates for *p.*, Block Bolts, *d.*, ...	2ft. by 2in., by ¼in.

Archd. Baird & Son's Estimate of Cost, ...	£3 10 0
Hurst, Nelson & Coy.'s „ ...	2 17 0

HUTCH USED AT FENCE COLLIERY, LESMAHAGOW.

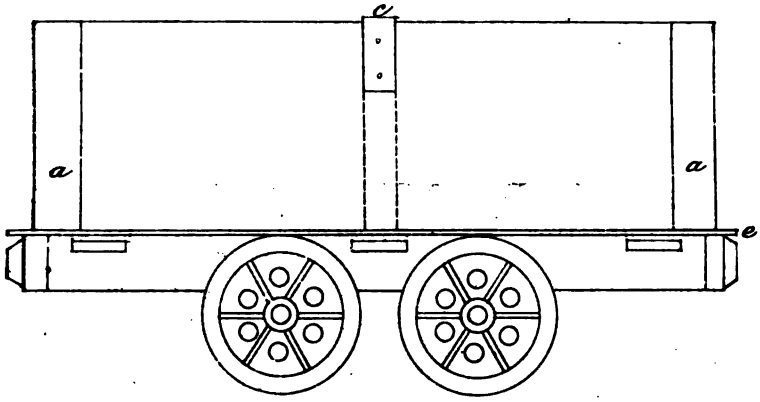

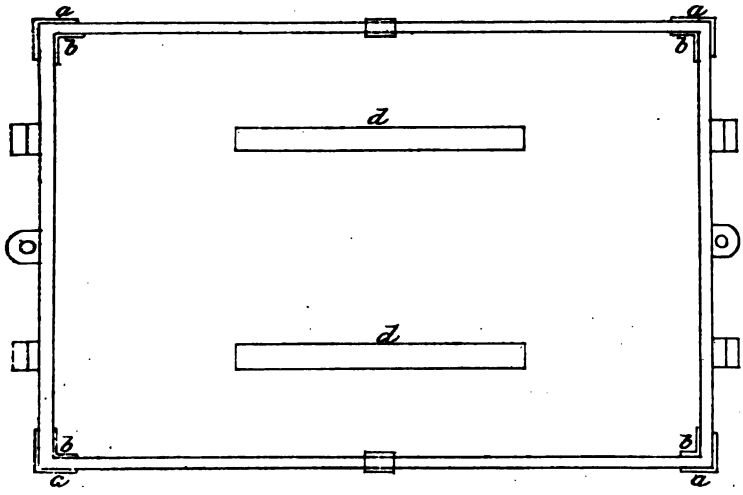

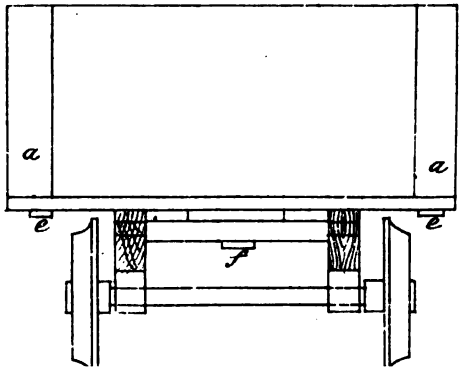

EXPLANATION RELATIVE TO PLATE XXX.

Name of Colliery, ...	GILBERTFIELD, CAMBUSLANG.
Owners, ...	CAMBUSLANG COAL COY. (LIMITED).
Height of Seam, ...	5 ft.
Mode of Working, ...	Stoop and room.
Inclination, ...	1 in 7 to 1 in 2.
Type of Rails, ...	Bridge Rails, 14 lbs. per yard.
Gauge of Rails, ...	2 ft. 7½ in.
Mode of Haulage, ...	Cuddies; Self-Acting Inclines.

Details of Hutch—

Tare, ...	3½ cwts.
Net, water measure, ...	8 cwts.
„ as usually filled, ...	10 cwts.
Length of Hutch inside, ...	4 ft. 3¾ in.
Width „ „	2 ft. 2⅛ in.
Depth „ „	1 ft. 6 in.
Wheels, diameter, ...	1 ft. 1¼ in.
„ between centres, ...	1 ft. 7 in.
Trams, larch, ...	4 ft. 9 in. by 4 in. by 3½ in.
Slots, oak, ...	3½ in. by 2 in.
Starts, oak, ...	3½ in. by 2 in.
Cleading, larch, ...	⅞ in. thick.
Bottom, sheet iron, ...	⅛ in. thick.
Doorbands, ...	2 ft. 2 in. by 1½ in. by ¼ in.
Drawbars, ...	4 ft. 5 in. by 2½ in. by ⅜ in.
Axles, ...	1½ in. diameter.

Archd. Baird & Son's Estimate of Cost, ...	£3 7 6
Hurst, Nelson & Coy.'s „ ...	2 18 6

HUTCH USED AT GILBERTFIELD COLLIERY, CAMBUSLANG.

Scale ¾ inch - 1 Foot.

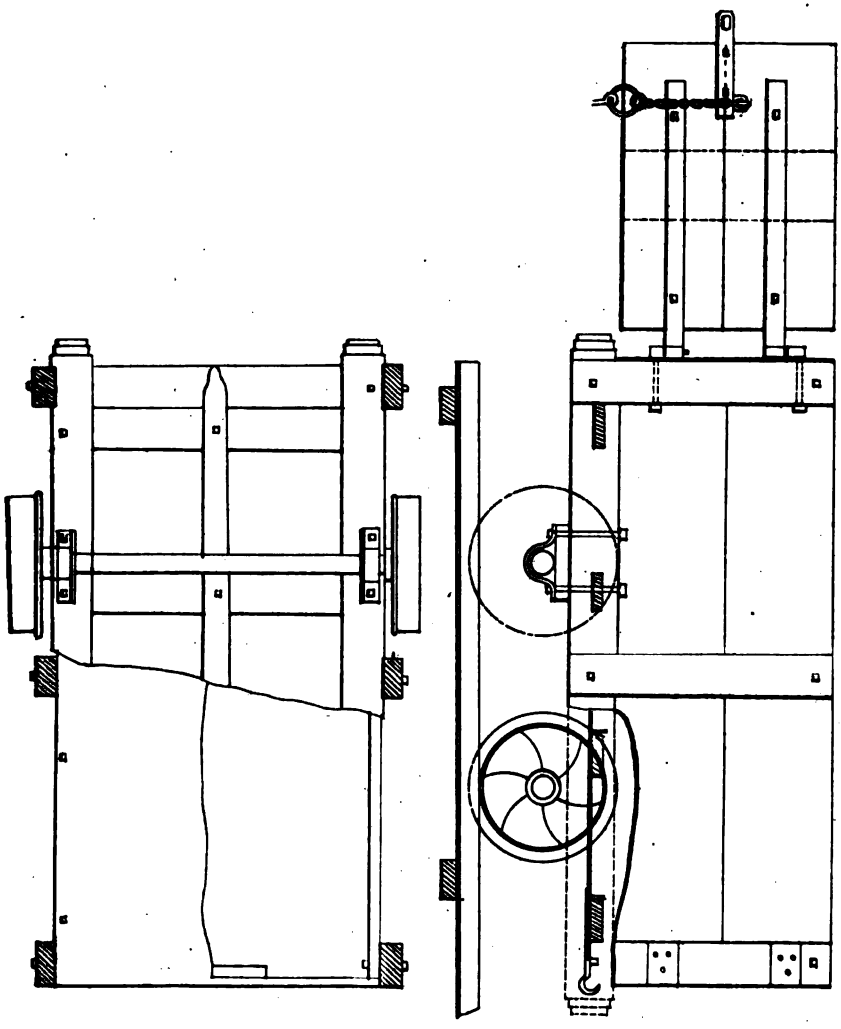

EXPLANATION RELATIVE TO PLATE XXXI.

Name of Colliery, ...	GILMERTON COLLIERY, GILMERTON.
Owners, ...	GILMERTON GAS COAL COY. (LIMITED).
Height of Seam, ...	3 to 4½ feet.
Mode of Working, ...	Stoop and room.
Inclination, ...	75°
Type of Rails, ...	Flat-bottomed, 12 lbs. per yd.
Gauge of Rails, ...	1 ft. 10 in.
Mode of Haulage, ...	Manual and Self-Acting Inclines.

Details of Hutch—

Tare, ...	3¼ cwts.
Net, water measure, ...	7 cwts.
„ as usually filled, ...	7 cwts.
Length of Hutch, inside, ...	4 ft.
Width, „ „	2 ft. 3 in.
Depth, „ „	1 ft. 6 in.
Wheels, diameter, ...	9 in.
„ between centres, ...	1 ft. 4 in.
Trams, larch, ...	4 ft. by 4 in. by 3 in.
Slots, oak, ...	3 in. by 1½ in.
Starts, ...	3 in. by 3 in.
Cleading, Scotch fir, ...	1⅛ in. thick.
Drawbars, ...	2½ in. by 1½ in.
Axles, ...	1¼ in. dia.

Archd. Baird & Son's Estimate of Cost, ...	£2	5	0
Hurst, Nelson & Coy.'s „ ...	2	0	0

HUTCH USED AT GILMERTON COLLIERY.

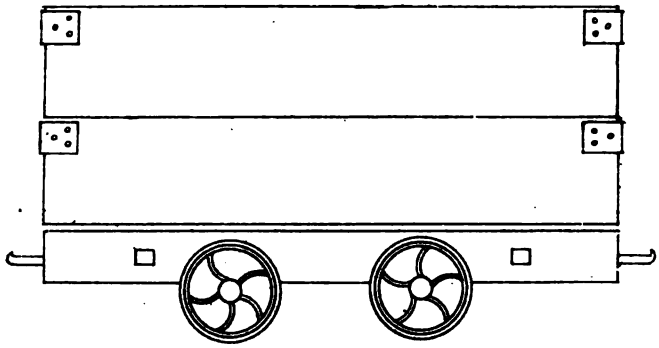

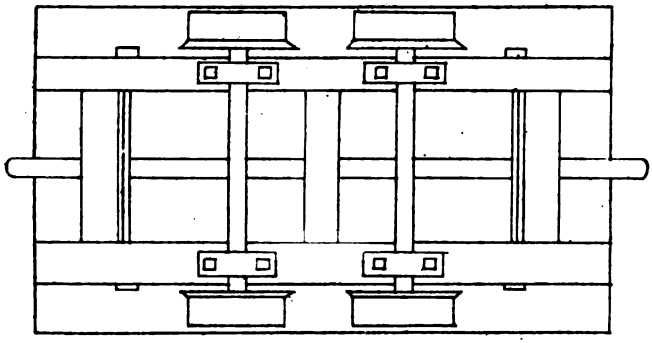

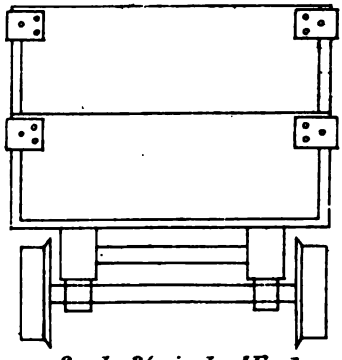

Scale 3/4 inch-1 Foot

EXPLANATION RELATIVE TO PLATE XXXII.

Name of Colliery,	GREENFIELD AND WHITEHILL, HAMILTON.
Owner, ...	ARCHIBALD RUSSELL.
Height of Seam, ...	3 ft. 9 in. to 6 ft. 6 in.
Mode of Working, ...	Stoop and room.
Inclination, ...	Level to 1 in 15.
Type of Rails, ...	Cast-Iron Tram Rails.
Gauge of Rails, ...	2 ft. 6 in.
Mode of Haulage,	Horse, and Bogie System of Endless Rope.

Details of Hutch—

Tare, ...	4 cwt.
Weight as usually filled, ...	10 cwt.
Length of Hutch, inside, ...	4 ft. 1 in.
Width " "	2 ft. 4 in.
Depth " "	1 ft. 8 in.
Wheels, cast steel, diameter, ...	1 ft. 2 in.
" between centres, ...	1 ft. 6 in.
Trams, larch, ...	4 ft. 9 in. by 4 in. by 3½ in.
Slots, oak, ...	3¼ in. by 2 in.
Starts, oak, ...	3¼ in. by 2 in.
Cleading, { Sides and Bottom, ...	Steel Sheets, ⅛ in. thick.
Cleading, { Ends and Doors, ...	... Larch, 1 in. thick.
Drawbars, ...	2¼ in. by ⅝ in.
Axles (rolled steel), ...	1⅜ in. diameter.

Archd. Baird & Son's Estimate of Cost, ...	£3	8	6
Hurst, Nelson & Coy.'s " ...	2	8	6

HUTCH USED AT GREENFIELD & WHITEHILL COLLIERIES,

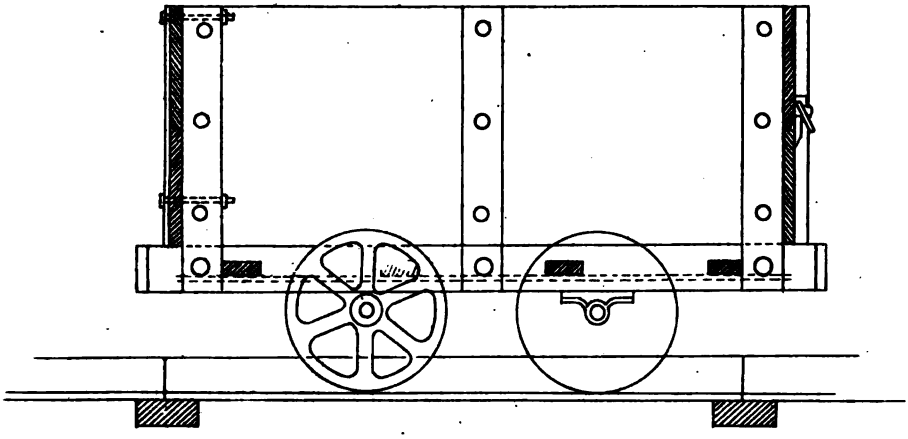

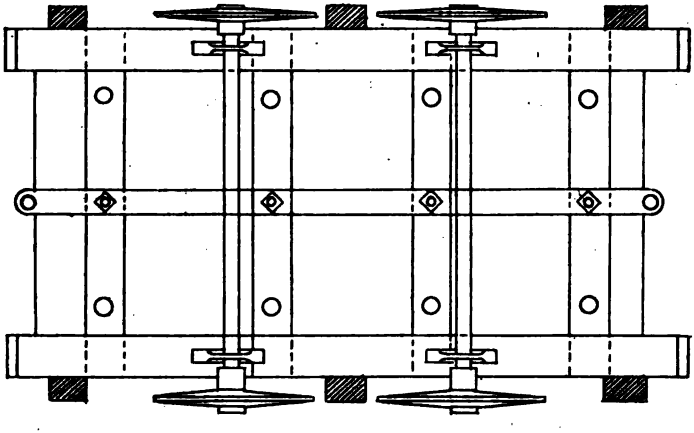

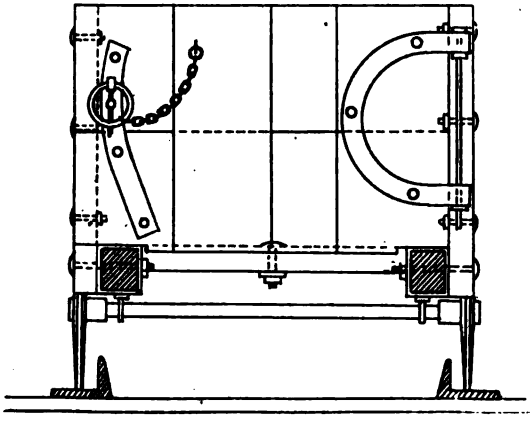

EXPLANATION RELATIVE TO PLATE XXXIII.

Name of Colliery, ...	HILL OF BEATH, DUNFERMLINE
Owners, ...	THE FIFE COAL CO. (LIMITED).
Height of Seam, ...	4 ft. to 6 ft.
Mode of Working, ...	Stoop and room, and Longwall.
Inclination, ...	1 in 2 to 1 in 12.
Type of Rails, ...	Tram Rails.
Gauge of Rails, ...	24 in.
Mode of Haulage, ...	Manual, horse.
Details of Hutch—	
Tare, ...	$3\frac{1}{2}$ cwts.
Net, water measure, ...	$5\frac{1}{2}$ cwts.
„ as usually filled, ...	6 to 8 cwts.
Length of Hutch inside, ...	3 ft. $11\frac{3}{4}$ in.
Width „ „	2 ft. $5\frac{3}{4}$ in.
Depth „ „	1 ft. 4 in.
Wheels, diameter, „	$11\frac{1}{4}$ in.
„ between centres, ...	18 in.
Trams, larch, ...	4 ft. 2 in. by 6in. by 3 in.
Slots, elm or ash, ...	4 in. by 2 in.
Starts, ...	None.
Cleading, larch, ...	$1\frac{1}{8}$ in.
Drawbars, ...	$2\frac{1}{2}$ in. by $\frac{5}{8}$ in.
Axles, ...	1 in.

Archd. Baird & Son's Estimate of Cost, ...	£1 17 6
Hurst, Nelson & Coy.'s „ ...	2 5 0

HUTCH USED AT HILL OF BEATH, COLLIERY, FIFESHIRE.

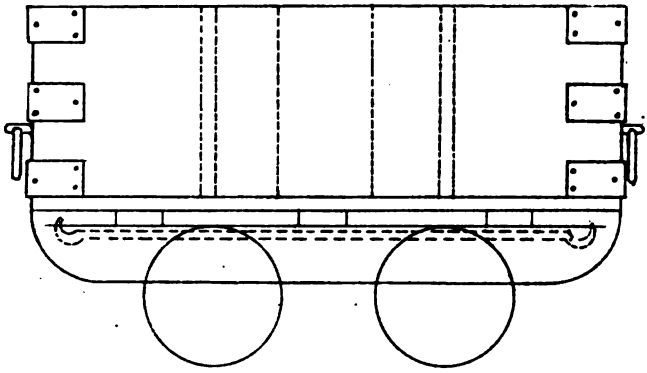

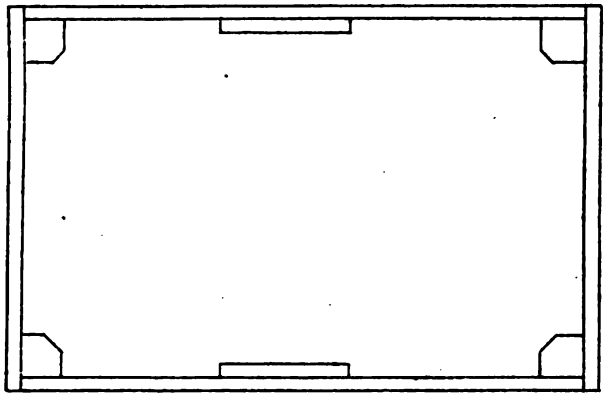

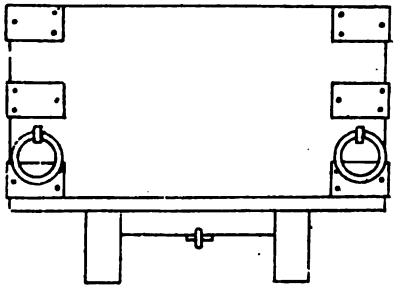

Scale ¾ inch = 1 Foot.

EXPLANATION RELATIVE TO PLATE XXXIV.

Name of Colliery, ...	KELTY, FIFESHIRE
Owners, ...	THE FIFE COAL COMPANY (LIMITED).
Height of Seam, ...	4 ft. 6 in. to 5 ft. 6 in.
Mode of Working, ...	Longwall.
Inclination, ...	1 in 3 to 1 in 8.
Type of Rails, ...	Tram Rails.
Gauge of Rails, ...	1 ft. 8½ in.
Mode of Haulage, ...	Manual, Horse and Engine
Details of Hutch—	
Tare, ...	3 cwt.
Net, water measure, ...	5 cwt.
„ as usually filled, ...	6 cwt.
Length of Hutch, inside, ...	3 ft. 4 in.
Width „ „	2 ft. 8 in.
Depth „ „	1 ft. 6 in.
Wheels, diameter, ...	11 in.
„ between centres, ...	1 ft. 3 in.
Trams, ...	5 in. by 2½ in.
Slots, ...	3 in. by 2 in.
Starts, ...	None.
Cleading, ...	1⅛ in.
Drawbars, ...	2½ in. by ½ in.
Axles, ...	1¼ round.

Archd. Baird & Son's Estimate of Cost, ...	£1 15 9
Hurst, Nelson & Coy.'s „ ...	2 8 0

HUTCH USED AT KELTY COLLIERY, FIFESHIRE.

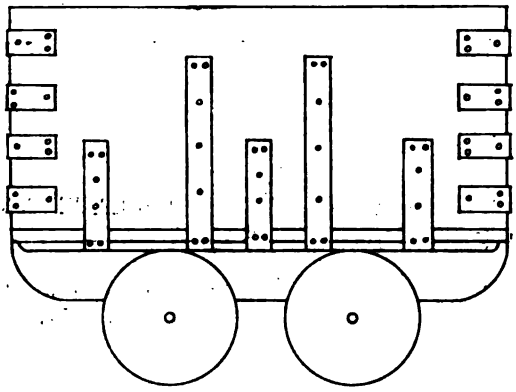

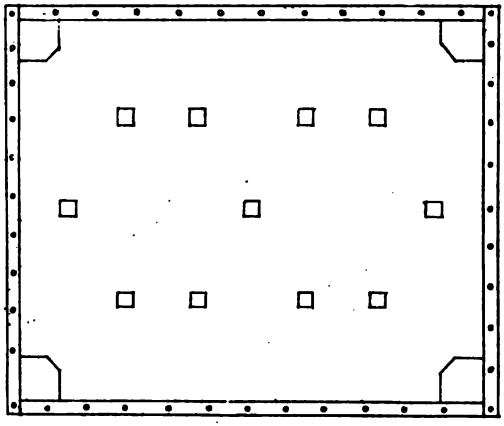

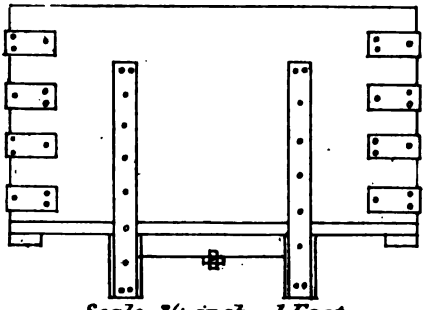

Scale ¾ inch = 1 Foot

EXPLANATION RELATIVE TO PLATE XXXV.

Name of Colliery, ...	KILSYTH COLLIERY, KILSYTH.
Owners, ...	WM. BAIRD & COY.
Height of Seam, ...	2 ft. to 3 ft. 6 in.
Mode of Working, ...	Longwall.
Inclination, ...	1 in 2 to flat.
Type of Rails, ...	Bridge Rails.
Gauge of Rails, ...	2 ft. 8 in.

Mode of Haulage, Manual; horse; tail rope and ordinary dook; and self-acting inclines.

Details of Coal Hutch—

Tare, ...	5 cwts.
Net, water measure, ...	9 cwts.
„ as usually filled, ...	10 cwts.
Length of Hutch, inside, ...	3 ft. 9 in.
Width „ „	2 ft. 4½ in.
Depth „ „	2 ft.
Wheels, diameter, ...	11 in.
Do., between centres, ...	1 ft. 7 in.
Trams, oak, ...	4 ft. 1 in. by 3¾ in. by 3½ in.
Slots, oak, ...	4 in. by 1¾ in.
Starts, angle iron, ...	3½ in. by 3½ in. by ¼ in.
Cleading, larch, ...	¾ in.
Drawbars, ...	2½ in. by ⅝ in.
Axles, ...	1⅜ in. sq.

Archd. Baird & Son's Estimate of Cost, ...	£3 5 0
Hurst, Nelson & Coy.'s „ ...	2 19 6

COAL HUTCH USED AT Wm BAIRD & Co's WORKS KILSYTH.

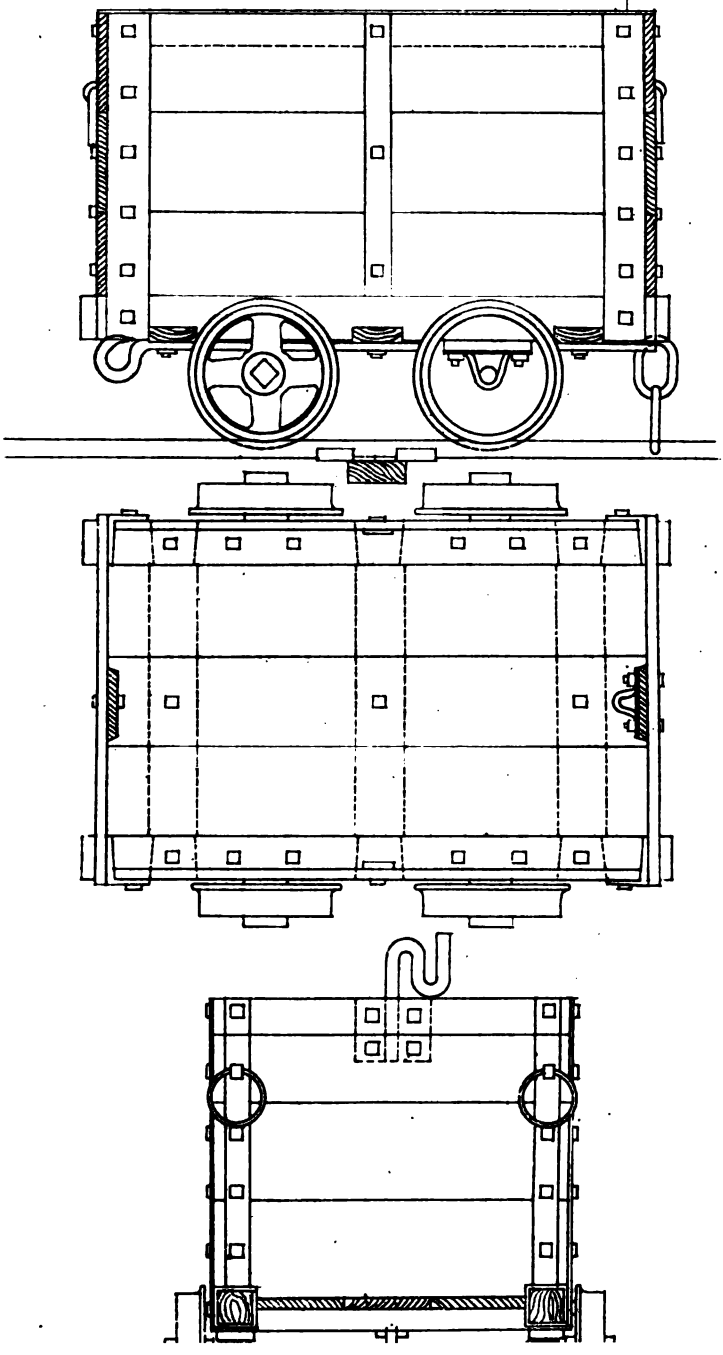

EXPLANATION RELATIVE TO PLATE XXXVI.

Name of Colliery, ...	KILSYTH COLLIERY, KILSYTH.
Owners, ...	WM. BAIRD & COY.
Height of Seam, ...	7 in. to 1 ft. 2in.
Mode of Working, ...	Longwall.
Inclination, ...	1 in 2 to flat.
Type of Rails, ...	Bridge Rails.
Gauge of Rails, ...	2 ft. 8 in.
Mode of Haulage,	Manual; horse; ordinary dook; and self-acting inclines.

Details of Ironstone Hutch—

Tare, ...	$4\frac{3}{4}$ cwts.
Net, water measure, ...	11 cwts.
„ as usually filled, ...	14 to 16 cwts.
Length of Hutch, inside, ...	3 ft. 9 in.
Width „ „	2 ft. $4\frac{1}{2}$ in.
Depth „ „	1 ft. 6 in.
Wheels, diameter, ...	11 in.
„ between centres, ...	1 ft. 7 in.
Trams, oak, ...	4 ft. 1 in. by $3\frac{3}{4}$ in. by $3\frac{1}{2}$ in.
Slots, oak, ...	4 in. by $1\frac{3}{4}$ in.
Starts, angle iron, ...	$3\frac{1}{2}$ in. by $3\frac{1}{2}$ in. by $\frac{1}{4}$ in.
Cleading, larch, ...	1 in.
Drawbars, ...	$2\frac{1}{2}$ in. by $\frac{5}{8}$ in.
Axles, ...	$1\frac{3}{8}$ in. sq.

Archd. Baird & Son's Estimate of Cost, ...	£3 5 0
Hurst, Nelson & Coy.'s „ ...	2 18 6

IRONSTONE HUTCH USED AT Wm. BAIRD & Co.'s WORKS, KILSYTH.

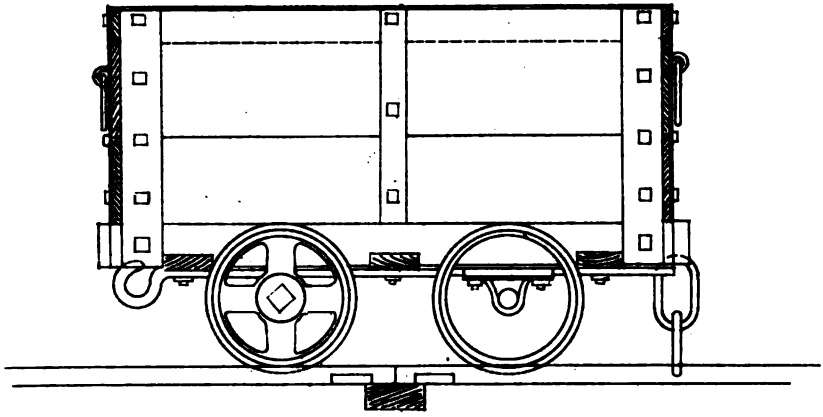

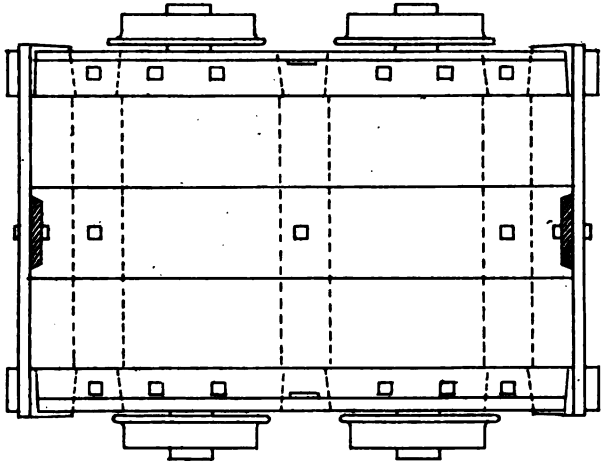

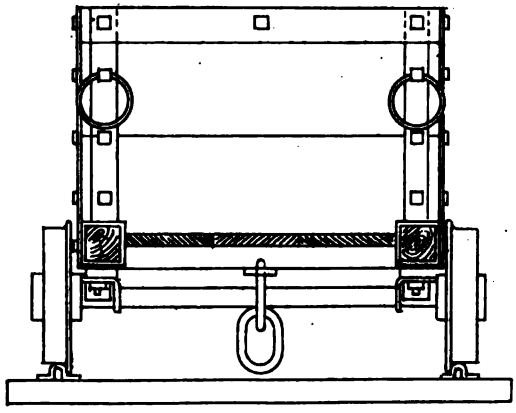

EXPLANATION RELATIVE TO PLATE XXXVII.

Name of Colliery, ...	KNOWNOBLE, WISHAW.
Owners, ...	KERR & MITCHELL.
Height of Seam, ...	3 ft. 9 in. to 6 ft.
Mode of Working, ...	Stoop and room.
Inclination, ...	1 in 8 to 1 in 4.
Type of Rails, ...	Bridge Rails.
Gauge of Rails, ...	2 ft.
Mode of Haulage—	Manual; horse.

Details of Hutch—

Tare, ...	4½ cwts.
Net, water measure, ...	8 cwts.
„ as usually filled, ...	10 cwts.
Length of Hutch, inside, ...	4 ft. 1 in.
Width „ „	2 ft. 6 in.
Depth „ „	1 ft. 6 in.
Wheels, diameter, ...	10 in.
„ between centres, ...	1 ft. 6 in.
Trams, larch, ...	4 ft. 6 in. by 4½ in. by 3½ in.
Slots, oak, ...	4 in. by 2 in.
Starts, steel, outside, ...	2 in. by ½ in.
„ „ next-end door, ...	2 in. by ⅝ in.
Cleading, larch, ...	1 in. thick.
Drawbars, ...	2 in. by ⅝ in.
Axles, ...	1⅜ in. diameter.
Bottom, ...	⅛ in. steel plate on ½ in. wood lining.

End door so made that either side may be used as a hinge.

Archd. Baird & Son's Estimate of Cost, ...	£3 5 6
Hurst, Nelson & Coy.'s „ ...	2 19 0

HUTCH USED AT KNOWNOBLE COLLIERY, WISHAW.

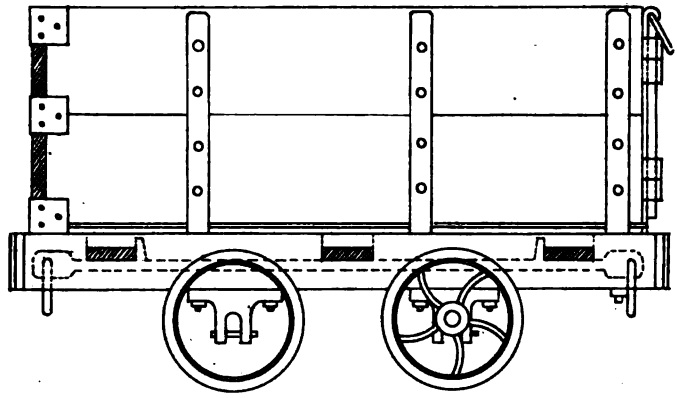

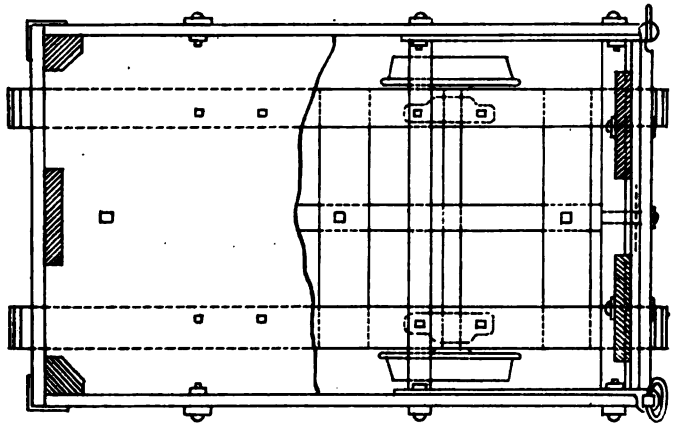

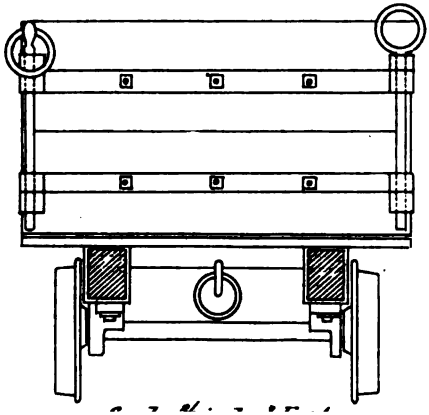

EXPLANATION RELATIVE TO PLATE XXXVIII.

Name of Colliery, ...	LEVEN NOS. 1 AND 2 PITS, DURIE PIT, KELTY NO. 4, AND BOGSIDE PIT.
Owners, ...	THE FIFE COAL COY. (LIMITED).
Height of Seam, ...	4 ft. to 5 ft.
Mode of Working, ...	Longwall and Stoop and room.
Inclination, ...	1 in 4 to 1 in 6.
Type of Rails, ...	Bridge Rails, 14 lbs. per yard.
Gauge of Rails, ...	1 ft. 9 in.
Mode of Haulage, ...	Manual, horse, engine.
Details of Hutch—	
Tare, ...	3½ cwts.
Net, water measure, ...	5 cwts.
„ as usually filled, ...	6½ to 7½ cwts.
Length of Hutch inside, ...	3 ft. 9¼ in.
Width „ „	2 ft. 8 in.
Depth „ „	1 ft. 6 in.
Wheels, diameter, ...	10¼ in.
„ between centres, ...	1 ft. 6 in.
Trams, ...	4½ in. by 2½ in.
Slots, ...	None.
Starts, ...	None.
Cleading, larch, ...	1⅛ in.
Drawbars, ...	2½ in. by ½ in.
Axles.	1¼ in., steel.

Archd. Baird & Son's Estimate of Cost, ...	£1 19 6
Hurst, Nelson & Coy.'s „ ...	2 5 0

HUTCH USED AT LEVEN, FIFESHIRE.

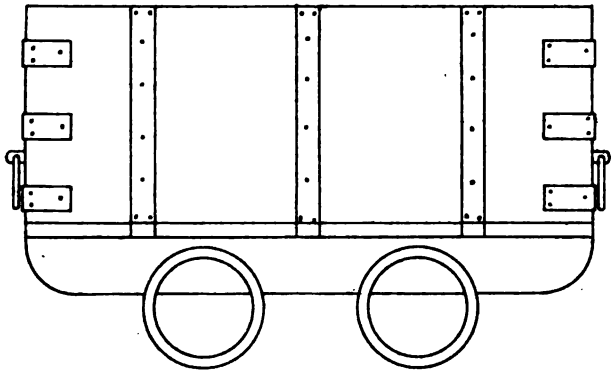

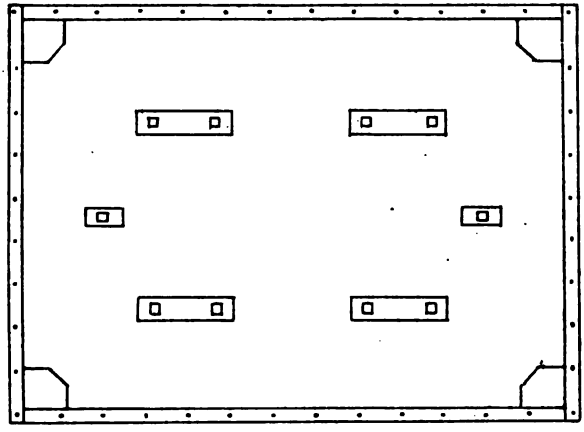

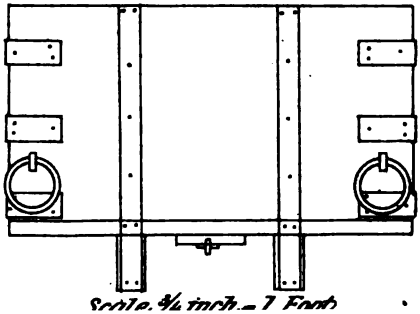

Scale. 3/4 inch = 1 Foot

EXPLANATION RELATIVE TO PLATE XXXIX.

Name of Colliery, ...	NEILSTON, KILSYTH.
Owners, ...	NEILSTON COAL COY.
Height of Seam, ...	1 ft. 7 in.
Mode of Working, ...	Longwall and Stoop and room.
Inclination, ...	1 in 8 to 1 in 1¾.
Type of Rails, ...	Bridge Rails.
Gauge of Rails, ...	3 ft. 2½ in.
Mode of Haulage, ...	Manual and single rope.
Details of Hutch—	
Tare, ...	3 cwts.
Net, water measure, ...	7 cwts.
„ usually filled, ...	7 cwts.
Length of Hutch inside, ...	3 ft. 9 in.
Width „ „	2 ft. 9 in.
Depth „ „	1 ft. 6 in.
Wheels, diameter, ...	10 in.
„ between centres, ...	1 ft. 6 in.
Trams, larch, ...	3 ft. 11 in. by 4 in. by 2 in.
Slots, ...	None.
Starts, larch and iron, ...	Larch, 1 ft. 6 in. by 3 in. by 3 in. Iron, 1 ft. 9¾ in. by 2 in. by ½ in.
Cleading, Scotch fir, ...	1 in. thick.
Drawbars, ...	3 ft. 10 in. by 2 in. by ⅜ in.
Axles, ...	1⅜ in. diameter.
Hutch Clasps, ...	7 in. by 3 in. by No. 12 W.G.
Clasps for holding bottom and end, ...	1 ft. 5 in. by 3 ft. by No. 12.

Archd. Baird & Son's Estimate of Cost, ...	£1	18	6
Hurst, Nelson & Coy.'s „ ...	2	6	6

HUTCH USED AT NEILSTON COLLIERY, KILSYTH.

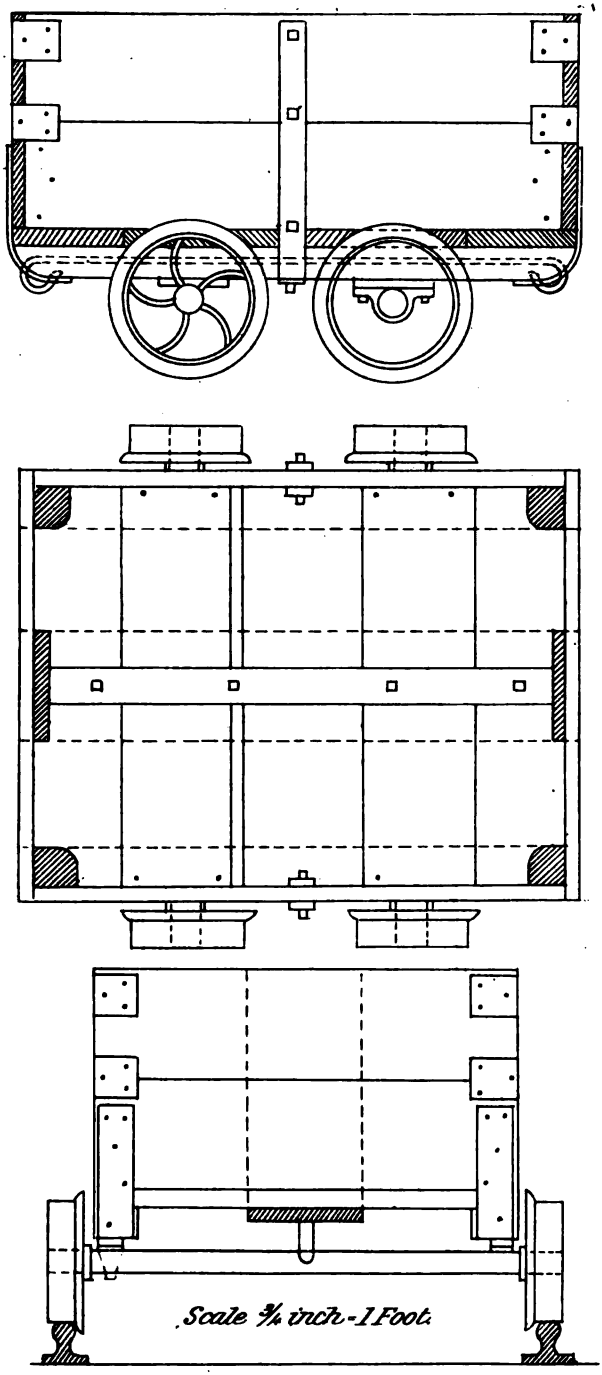

EXPLANATION RELATIVE TO PLATE XL.

Name of Colliery, NEWLISTON SHALE MINES, KIRKLISTON.
Owners, YOUNG'S PARAFFIN LIGHT AND MINERAL OIL COY. (LIMITED).

Height of Seam, ...	Over 6 ft.
Mode of Working, ...	Stoop and room.
Inclination, ...	27°.
Type of Rails, ...	Edge Rails.
Gauge of Rails, ...	2 ft. 9 in.
Mode of Haulage, ...	Manual and horse.

Details of Hutch—

Tare, ...	5½ cwts.
Net, water measure, ...	12 cwts.
„ as usually filled, ...	17 cwts.
Length of Hutch, inside, ...	4 ft. 1 in.
Width „ „	2 ft. 8½ in. at top, 2 ft. 2½ in. at bot.
Depth „ „	1 ft. 9 in.
Wheels, diameter, ...	1 ft. 1½ in.
„ between centres, ...	1 ft. 4 in.
Trams, American oak,... ...	4 ft. 7 in. by 4 in. by 3½ in.
Slots, „	4 in. by 3½ in.

Cleading—Sides and bottom, one steel plate ⅛ in. thick; ends, $\frac{3}{16}$ in. thick, riveted together with ⅜ in rivets.

Drawbars, ...	2½ in. by ¾ in.
Axles, ...	1½ in. dia.

Archd. Baird & Son's Estimate of Cost, ...	£5 10 0
Hurst, Nelson & Coy.'s „ ...	3 15 0

HUTCH USED AT NEWLISTON SHALE MINES, KIRKLISTON.

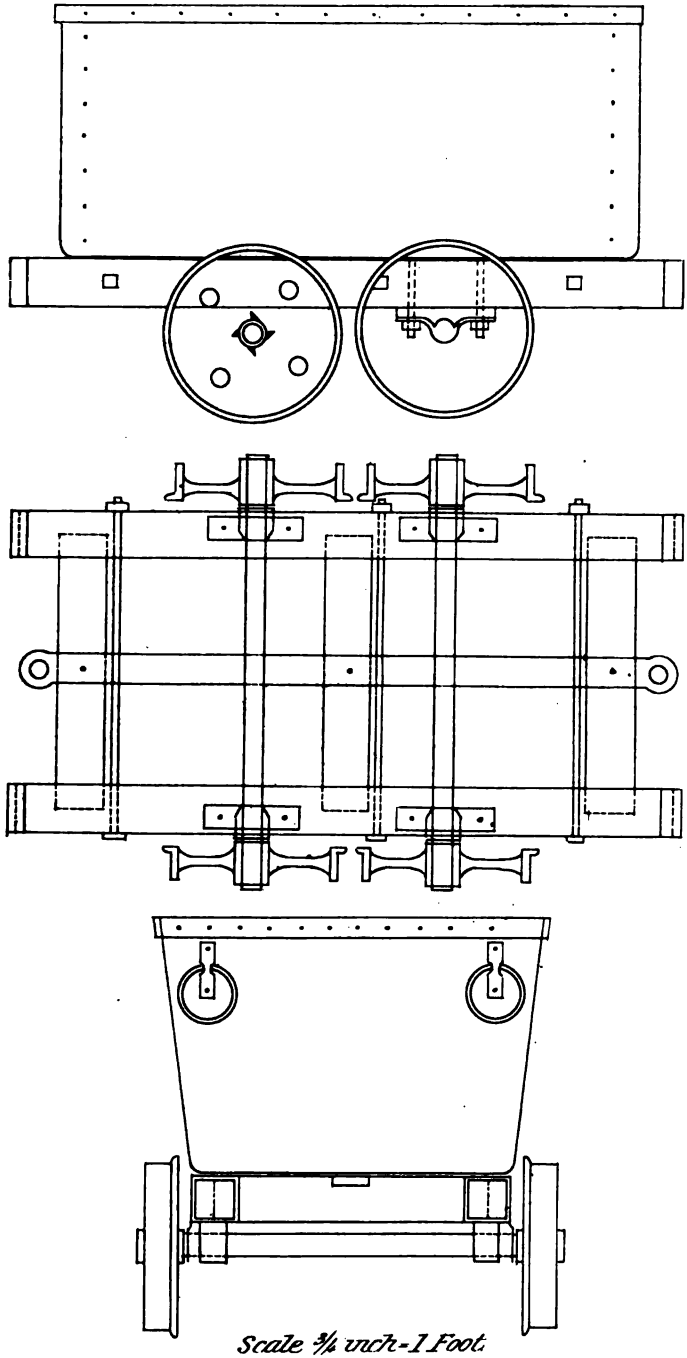

Scale 3/4 inch - 1 Foot.

EXPLANATION RELATIVE TO PLATE XLI.

Name of Colliery, ...	NEWTON COLLIERY, NEWTON.
Owners, ...	JAMES DUNLOP & COY. (LIMITED).
Height of Seams, ...	2 ft. 3 in. to 5 ft.
Mode of Working, ...	Longwall.
Inclination, ...	1 in 5.
Type of Rails, ...	20 lbs. and 14 lbs. per yard, Permanent and Bridge Rails.
Gauge of Rails, ...	1 ft. 8 in.
Mode of Haulage, ...	Manual, horse, single tail-rope and self-acting endless rope.

Details of Hutch—

Tare, ...	3½ cwt.
Net, water measure, ...	
„ as usually filled, ...	9 to 10 cwts.
Length of Hutch inside, ...	4 ft.
Width „ „	2 ft. 7 in.
Depth „ „	1 ft. 6 in.
Wheels, diameter, ...	9 in.
„ between centres, ...	1 ft. 2⅞ in.
Trams, larch—iron frame, ...	2½ in. by 2 in.
Starts, larch, ...	3½ in. by 3½ in.
Cleading, larch—sides and ends, ...	1 in. thick.
Bottom, ¼ in. steel plate, ...	4 ft. 2 in. by 2 ft. 9 in.
Drawbars, included in iron frame, ...	
Axles, ...	1¼ in. diameter.
Iron mounting at sides and ends, ...	1¼ in. by ¼ in.

Archd. Baird & Son's Estimate of Cost, ...	£2	2	6
Hurst, Nelson & Coy.'s „ ...	3	0	6

HUTCH USED AT NEWTON COLLIERY, CAMBUSLANG.

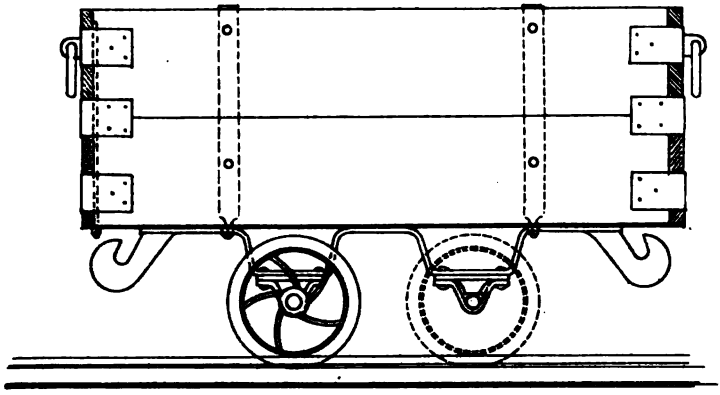

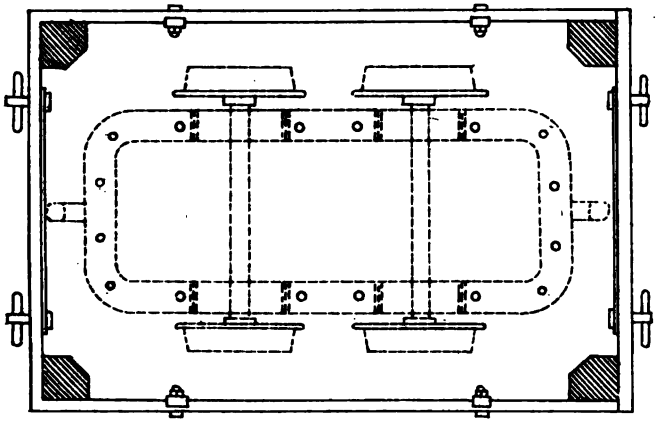

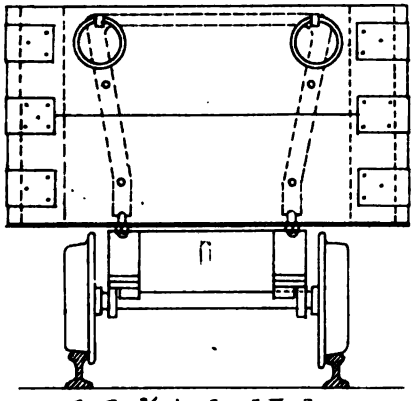

Scale 3/4 inch = 1 Foot.

EXPLANATION RELATIVE TO PLATE XLII.

Name of Colliery, ...	NIDDRIE, PORTOBELLO.
Owners,...	NIDDRIE AND BENHAR COAL COY. (LIMITED).
Height of Seam, ...	Great Seam, 4 ft. 6 in.
„ „	Stairhead Seam, 4 ft.
Mode of Working, ...	... Longwall.
Inclination, ...	... 50 deg. to vertical.
Type of Rails, ...	... Flat bottom.
Gauge of Rails,...	... 2 ft.
Mode of Haulage, ...	Manual and horse.

Details of Hutch—

Tare.	... $5\frac{1}{4}$ cwt.
Net, water measure,	6 to $6\frac{1}{2}$ cwt. Cannel Coal, 10 cwt. Ironstone.
„ as usually filled, ...	7 cwt. Cannel Coal, 10 cwt. Ironstone.
Length of Hutch, inside, ...	... 4 ft. 6 in.
Width „ „	... 2 ft. $5\frac{1}{2}$ in.
Depth „ „	... 1 ft. 10 in.
Wheels, diameter, ...	... 10 in.
„ between centres, ...	... 1 ft. $2\frac{1}{2}$ in.
Trams, oak, ...	5 ft. by $4\frac{1}{2}$ in., by $2\frac{1}{2}$ in.
Slots, oak, ...	... 4 in. by 2 in.
Cleading, steel plate, ...	... $\frac{1}{8}$ in.
Drawbars, ...	... $2\frac{1}{4}$ in. by $\frac{5}{8}$ in.
Axles, ...	... $1\frac{1}{2}$ in. diameter.

Archd. Baird & Son's Estimate of Cost, ...	£5	2	0
Hurst, Nelson & Coy.'s „ ...	3·12	6	

HUTCH USED AT NIDDRIE COLLIERY, PORTOBELLO.

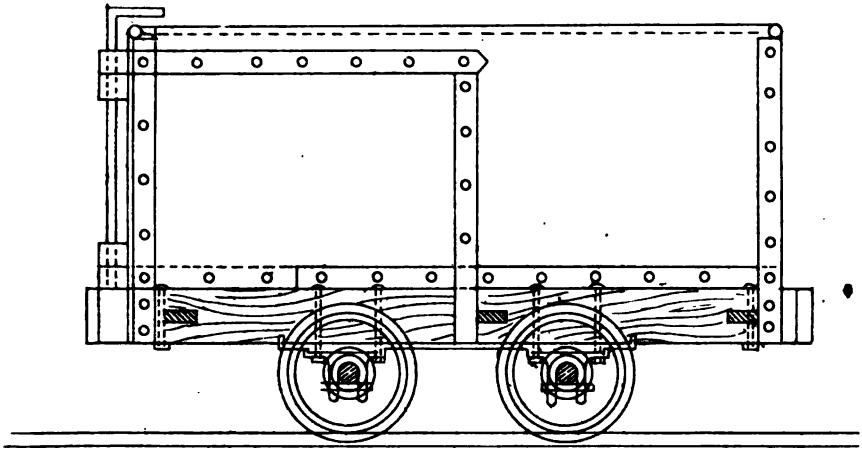

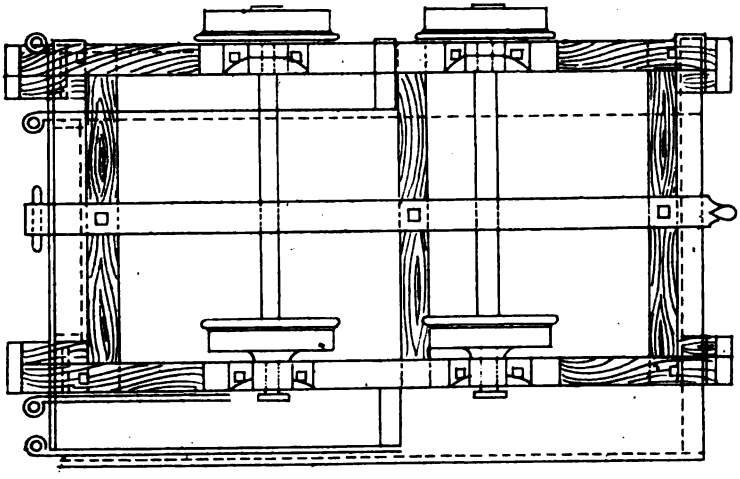

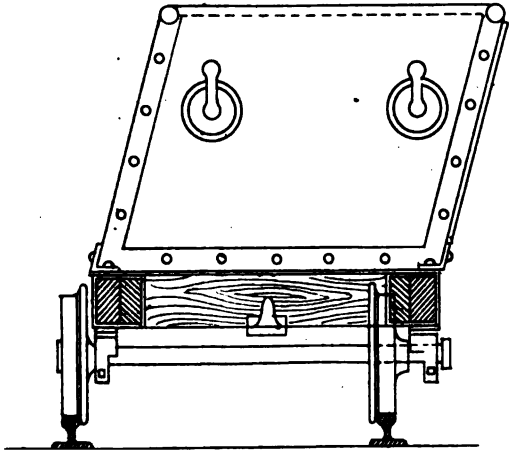

EXPLANATION RELATIVE TO PLATE XLIII.

Name of Colliery, ...	PENTLAND SHALE MINES, LOANHEAD.
Owners,...	CLIPPENS OIL COY. (LIMITED).
Height of Seam, ...	
Mode of Working, ...	
Inclination, ...	
Type of Rails, ...	
Gauge of Rails, ...	2 ft. 6 in.
Mode of Haulage, ...	Manual and horse.
Details of Hutch—	
Tare, ...	
Net, water measure, ...	
„ as usually filled, ...	
Length of Hutch, inside, ...	3 ft. 7 in.
Width „ „	2 ft. 9 in.
Depth „ „	1 ft. 10 in.
Wheels, diameter, ...	10½ in.
„ between centres, ...	
Trams, oak, ...	4 ft. by 4 in., by 4 in.
Slots, ...	
Starts, angle irons, ...	1½ in. by 1½ in., by ⅜ in.
Cleading, steel plate, ...	⅛ in. thick.
Drawbars, three—centre one, 3 in. by ⅞ in., side ones, 2½ in. by ⅝ in.	
Axles, steel, ...	1⅜ in. diameter.

Archd. Baird & Son's Estimate of Cost, ...	£3 19 6
Hurst, Nelson & Coy.'s „ ...	3 1 6

HUTCH USED AT PENTLAND SHALE MINES.

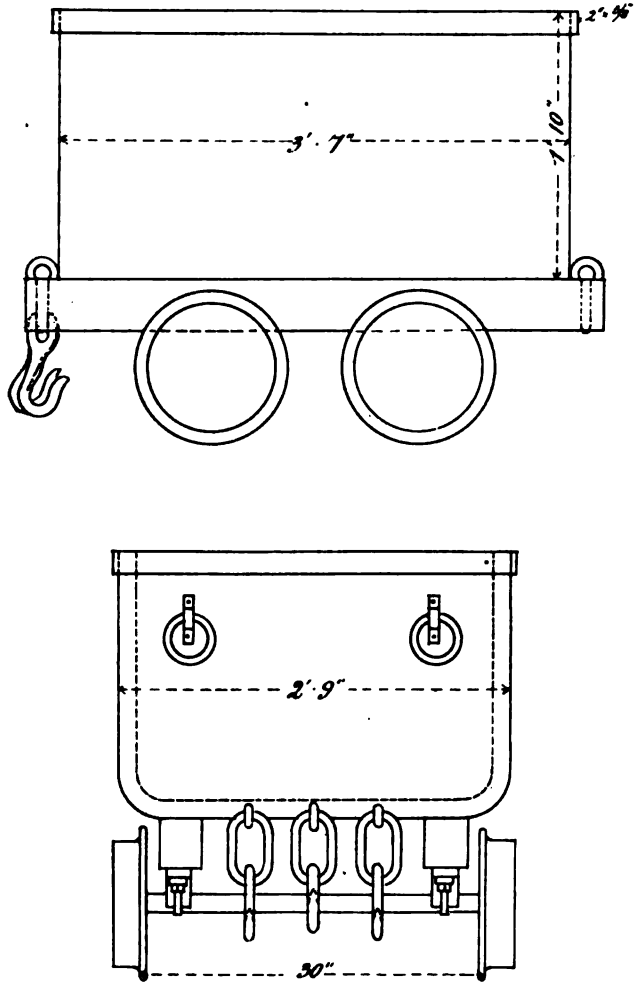

Scale 3/4 inch = 1 Foot.

EXPLANATION RELATIVE TO PLATE XLIV.

Name of Colliery, ...	PIRNIE, FIFESHIRE.
Owners, ...	THE FIFE COAL CO. (LIMITED).
Height of Seam, ...	4 ft.
Mode of Working, ...	Longwall.
Inclination, ...	1 in 6.
Type of Rails, ...	Tram Rails.
Gauge of Rails, ...	1 ft. 8 in.
Mode of Haulage, ...	Manual; horse; tail rope.

Details of Hutch—

Tare, ...	$2\frac{3}{4}$ cwts.
Net, water measure, ...	5 cwts.
„ as usually filled, ...	$6\frac{1}{2}$ cwts.
Length of Hutch, inside, ...	3 ft. $3\frac{3}{4}$ in.
Width „ „	2 ft. $6\frac{3}{4}$ in.
Depth „ „	1 ft. 6 in.
Wheels, diameter, ...	10 in.
„ between centres, ...	1 ft. 4 in.
Trams, larch, ...	$4\frac{1}{2}$ in. by $2\frac{1}{8}$ in.
Slots, ...	None.
Cleading, larch, ...	$1\frac{1}{8}$ in. thick.
Drawbars, ...	$2\frac{1}{2}$ in. by $\frac{5}{8}$ in.
Axles, ...	$1\frac{1}{4}$ in.

Archd. Baird & Son's Estimate of Cost, ...	£1 17 6
Hurst, Nelson & Coy.'s „ ...	2 3 6

HUTCH USED AT PIRNIE COLLIERY, FIFESHIRE.

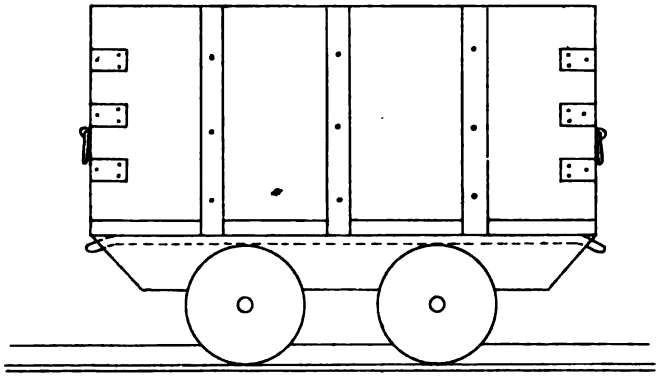

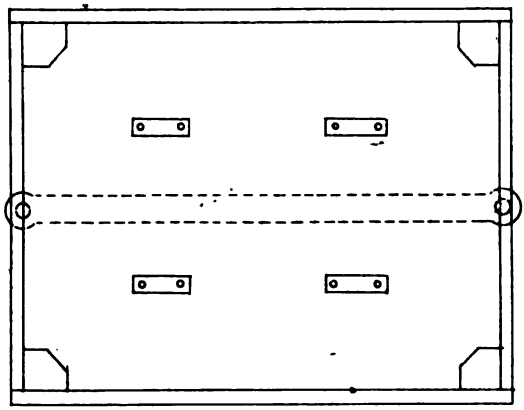

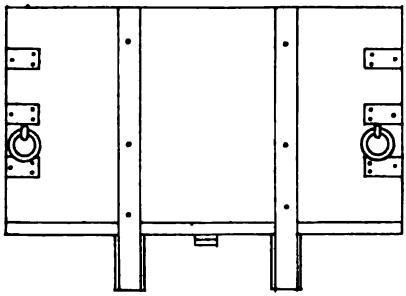

EXPLANATION RELATIVE TO PLATE XLV.

Name of Colliery, ...	QUARTER, HAMILTON.
Owners, ...	COLIN DUNLOP & CO.
Height of Seam, ...	5 ft. 6 in.
Mode of Working, ...	Stoop and room.
Inclination, ...	1 in 8.
Type of Rails, ...	Tram Rails.
Gauge of Rails, ...	2 ft. 6 in.
Mode of Haulage,	Horse, and bogie system of endless rope.

Details of Hutch—

Tare, ...	5 cwts.
Net, water measure, ...	12 cwts.
„ as usually filled, ...	16 cwts.
Length of Hutch, inside, ...	4 ft. 3½ in.
Width „ „	2 ft. 6 in.
Depth „ „	2 ft. 4 in.
Wheels, diameter, ...	1 ft. 1 in.
„ between centres, ...	1 ft. 7 in.
Trams, oak, ...	4 ft. 8 in. by 5 in. by 3½ in.
Slots, „	3½ in. by 2 in.
Starts, iron, ...	2 in. by ⅜ in.
Cleading, Scotch fir, ...	1 in. thick.
Drawbars, ...	2 in. by ⅝ in.
Axles, ...	1⅜ in. diameter.

Archd. Baird & Son's Estimate of Cost, ...	£3 7 6
Hurst, Nelson & Coy.'s „ ...	2 17 0

HUTCH USED AT QUARTER COLLIERY, HAMILTON.

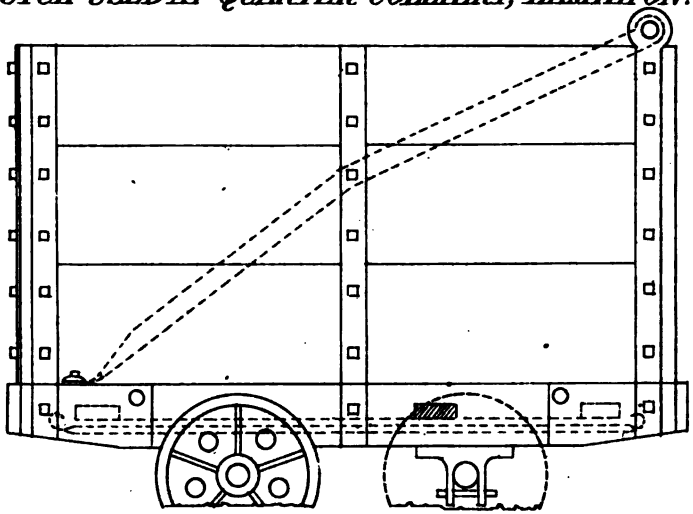

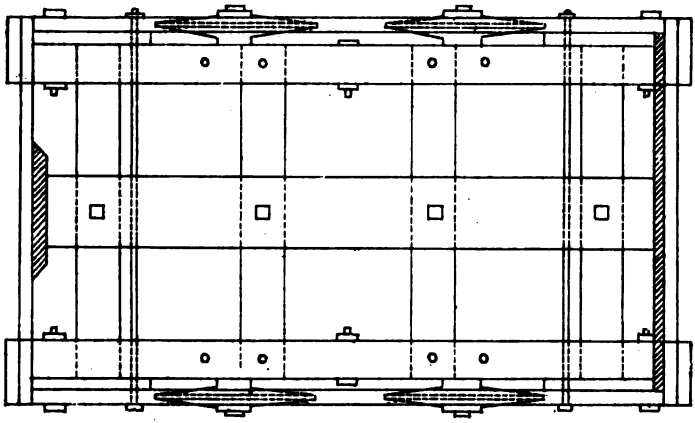

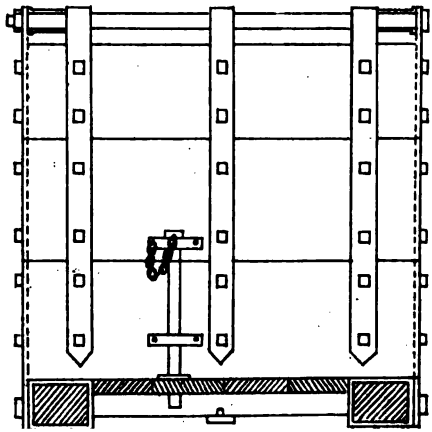

EXPLANATION RELATIVE TO PLATE XLVI.

Name of Colliery, ...	ST. HELENS, WORKINGTON.
Owners, ...	THE ST. HELENS COLLIERY AND BRICK WORKS CO., LTD.
Height of Seams, ...	2 ft. 3 in., 5 ft., and 8 ft.
Mode of Working, ...	Longwall and Pillar and Stall.
Inclination, ...	1 in 9.
Type of Rails, ...	Bridge and Flat-bottomed Rails.
Gauge of Rails, ...	2 ft.
Mode of Haulage, ...	Horse, and Engine Dip Haulage.

Details of Hutch—

Tare, ...	$5\frac{1}{4}$ cwts.
Net Water Measure, ...	$11\frac{1}{2}$ cwts.
„ as usually filled, ...	$11\frac{1}{2}$ cwts.
Length of Hutch inside, ...	3 ft. 8 in.
Width „ „	3 ft. $2\frac{1}{2}$ in.
Depth „ „	2 ft.
Wheels, diamater, ...	1 ft.
„ between centres, ...	1 ft. $4\frac{1}{2}$ in.
Trams, larch, ...	4 ft. 4 in. by $5\frac{1}{2}$ in. by $2\frac{1}{2}$ in.
Doubling, larch on end of Trams, ...	2 in. broad.
Slots, larch, ...	$3\frac{1}{2}$ in. by 3 in.
Cleading, white pine, ...	1 in. thick.
Drawbars, ...	2 in. by $\frac{5}{8}$ in.
Axles, ...	$1\frac{1}{2}$ in.
Hutch Bottom, Iron Sheet, ...	3 ft. $9\frac{1}{2}$ in. by 3 ft. 4 in. by $\frac{3}{16}$ in.
Inside Angle Irons, ...	2 in. by 2 in. by $\frac{3}{16}$ in.
Iron Hoop round top of Hutch, outside, ..	$2\frac{1}{2}$ in. by $\frac{3}{16}$ in.
„ „ inside, ...	$2\frac{1}{2}$ in. by $\frac{1}{8}$ in.
„ 2 pieces at each corner of Hutch,...	$2\frac{1}{2}$ in. by $\frac{1}{8}$ in.
„ 1 „ end „ ...	$2\frac{1}{2}$ in. by $\frac{3}{16}$ in.

The nipple for horse limmers passes through the centre of the last named iron hoop, and inside iron starts $1\frac{3}{4}$ in. by $\frac{5}{8}$ in. at each end of the hutch. The angle irons are rivetted to the bottom sheet along the sides, and the cleading is secured to the angle irons by $\frac{3}{8}$ rivets. The rivets are snapped cold.

The handles and nipples for horse limmers are fixed to each end as shown at *a*.

Archd. Baird & Son's Estimate of Cost, ...	£3 14 6
Hurst, Nelson & Coy.'s „ ...	3 7 6

HUTCH USED AT St. HELENS COLLIERY, WORKINGTON.

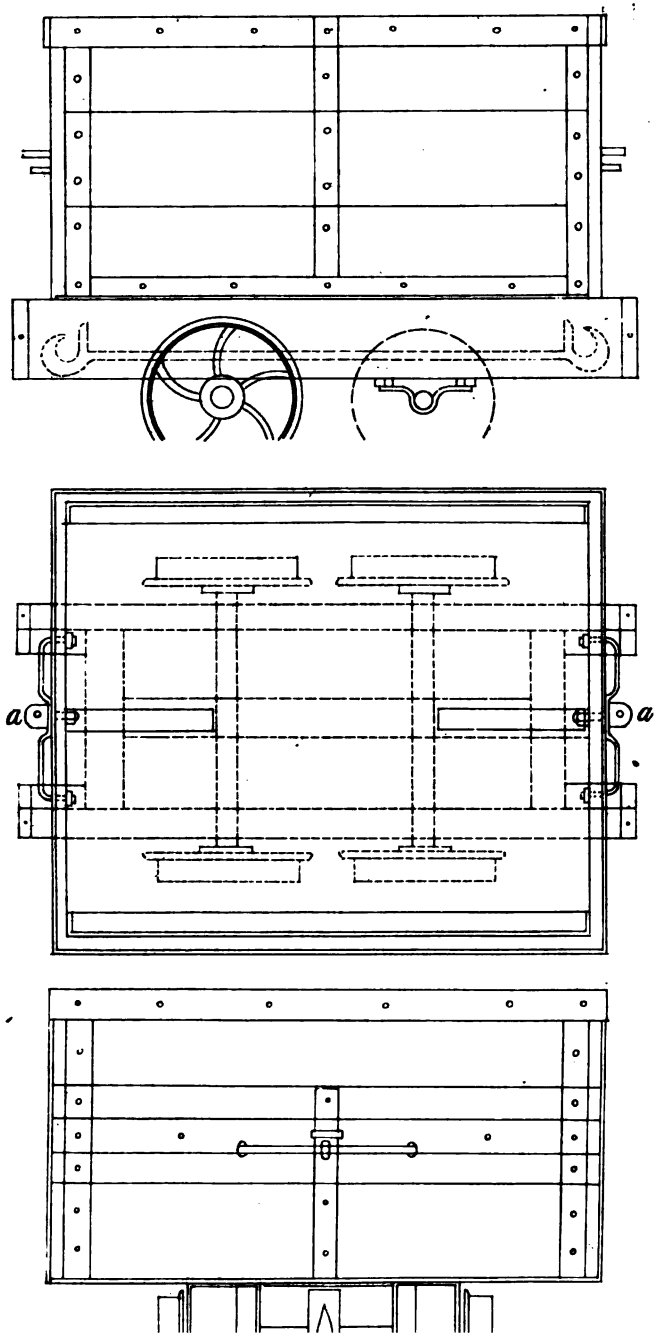

EXPLANATION RELATIVE TO PLATE XLVII.

Name of Collieries, ...	SHIELDHILL AND NETHERCROY.
Owners, ...	CARRON COMPANY, FALKIRK.
Height of Seam, ...	2 ft. 6 in. to 3 ft.
Mode of Working, ...	Longwall.
Inclination, ...	Flat.
Type of Rails, ...	Flat-bottomed.
Guage of Rails, ...	2 ft.
Mode of Haulage, ...	Horse.
Details of Hutch—	
Tare, ...	3½ cwts.
Net, water measure, ...	6 cwts.
„ as usually filled, ...	7¼ cwts. (coal).
Length of Hutch, inside, ...	3 ft.
Width „ „	2 ft. 7 in.
Depth „ „	1 ft. 6 in.
Wheels, diameter, ...	9 in.
„ between centres, ...	1 ft. 4 in.
Trams, larch, ...	3 ft. 4 in. by 4 in. by 4 in.
Slots, oak, ...	3 in. by 2½ in.
Starts, wrought iron, ...	2½ in. by ½ in.
Cleading, larch, ...	1 in. thick.
Drawbars, ...	2 in. by ⅝ in.
Axles, ...	1⅜ in. dia.

Archd. Baird & Son's Estimate of Cost, ...	£2	5	6
Hurst, Nelson & Coy.'s „ ...	2	9	0

HUTCH USED AT SHIELDHILL & NETHERCROY COLLIERIES, FALKIRK.

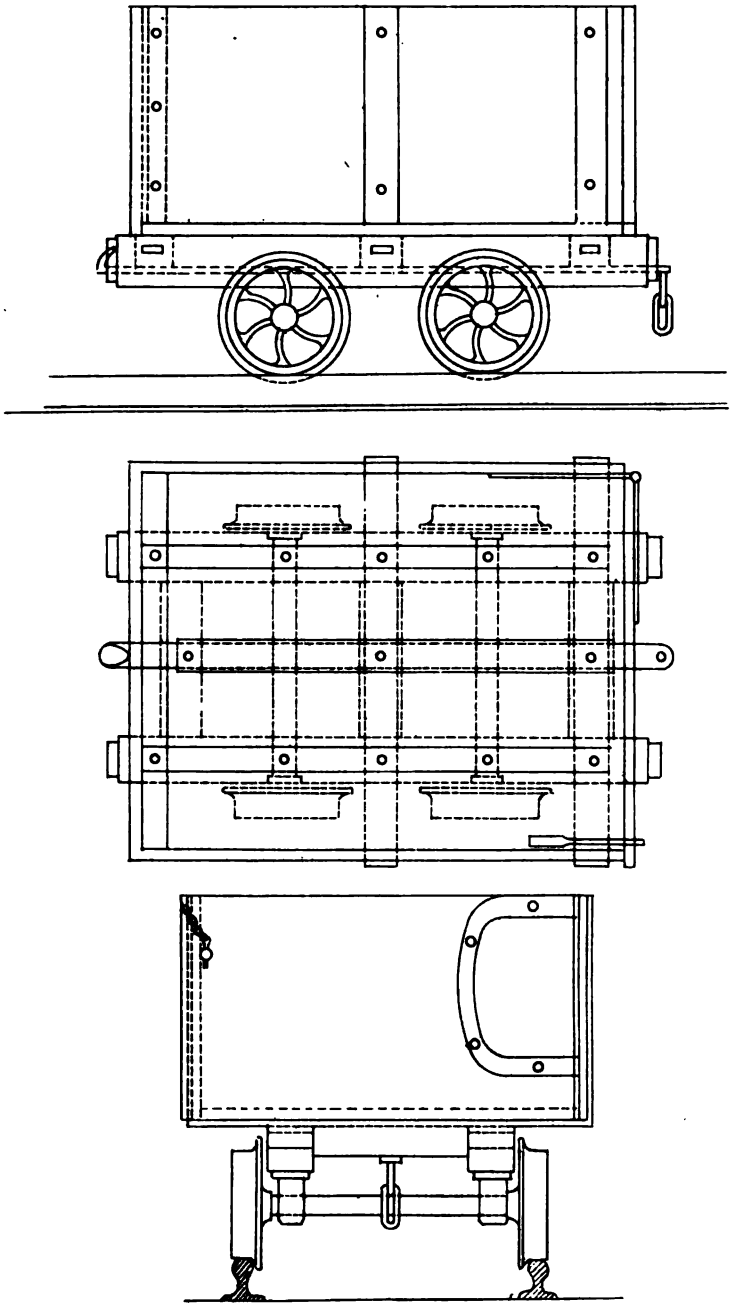

Scale ¾ inch = 1 Foot.

EXPLANATION RELATIVE TO PLATE XLVIII.

Name of Colliery, ...	SPRINGHILL, KILMARNOCK.
Owners, ...	ARCHIBALD FINNIE & SON.
Height of Seam, ...	3 ft.
Mode of Working, ...	Longwall.
Inclination, ...	1 in 9.
Type of Rails, ...	Bridge Rails, 14 lbs. per yd.
Gauge of Rails, ...	20½ in.
Mode of Haulage, ...	Manual, horse, and self-acting incline.

Details of Hutch—

Tare, ...	2½ cwts.
Net, water measure, ...	5 cwts.
„ as usually filled, ...	9 cwts.
Length of Hutch, inside, ...	4 ft.
Width, „ „	2 ft. 8 in.
Depth, „ „	1 ft. 3 in.
Wheels, diameter, ...	10 in.
„ between centres, ...	1 ft. 7 in.
Trams, larch, ...	4 ft. 6 in. by 5½ in. by 2¾ in.
Slots, oak, ...	4 in. by 1¾ in.
Starts, elm, ...	2¼ in. by 2¼ in.
Cleading, larch, ...	6½ in. by 1 in.
Axles, steel, ...	1⅜ in. dia.
Clasps, hoop iron, ...	1¼ in.

Archd. Baird & Son's Estimate of Cost, ...	£2	0	0
Hurst, Nelson & Coy.'s „ ...	2	3	6

HUTCH USED AT SPRINGHILL COLLIERY, KILMARNOCK.

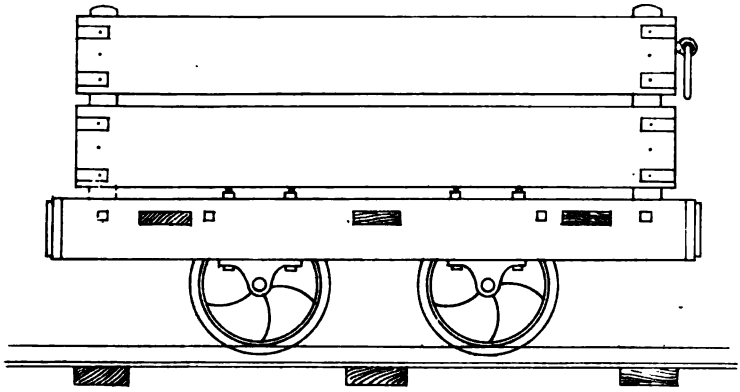

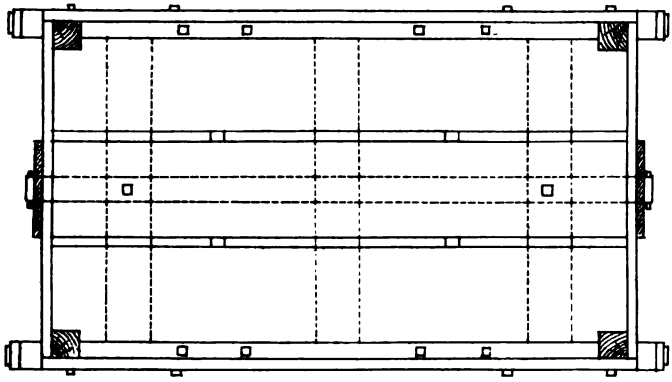

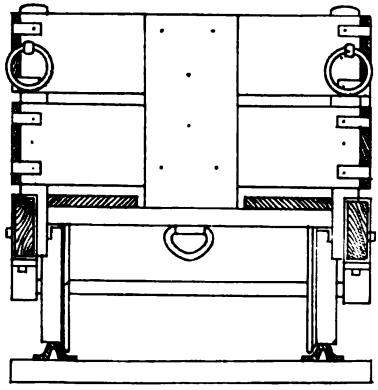

Scale 3/4 inch = 1 Foot.

EXPLANATION RELATIVE TO PLATE XLIX.

Name of Colliery, ...	SUMMERLEE, COATBRIDGE.
Owners,	SUMMERLEE AND MOSSEND IRON AND STEEL COY.
Height of Seam, ...	5 ft. 6 in.
Mode of Working, ...	Stoop and room.
Inclination, ...	1 in 8.
Type of Rails, ...	Tram Rails.
Gauge of Rails, ...	2 ft. 6 in.
Mode of Haulage, ...	Manual, horse, and bogie system of endless rope.
Details of Hutch—	
Tare, ...	4½ cwts.
Net, water measure, ...	8 cwts.
„ as usually filled, ...	10 cwts.
Length of Hutch, inside, ...	4 ft. 1½ in.
Width, „ „	2 ft. 3 in.
Depth, „ „	1 ft. 8 in.
Wheels, diameter, ...	1 ft. 2½ in.
„ between centres, ...	1 ft. 7 in.
Trams, larch, ...	4 ft. 6 in. by 4 in. by 3½ in.
Slots, oak, ...	3½ in. by 2 in.
Starts, oak, ...	3½ in. by 1¾ in.
Cleading, larch, ...	1 in. thick.
Drawbars, ...	2 in. by ⅝ in.
Axles, ...	1⅜ in. diameter.

Archd. Baird & Son's Estimate of Cost, ...	£1 19 6
Hurst, Nelson & Coy.'s „ ...	2 6 0

HUTCH USED AT SUMMERLEE & MOSSEND IRON & STEEL Co.'s COLLIERIES, COATBRIDGE.

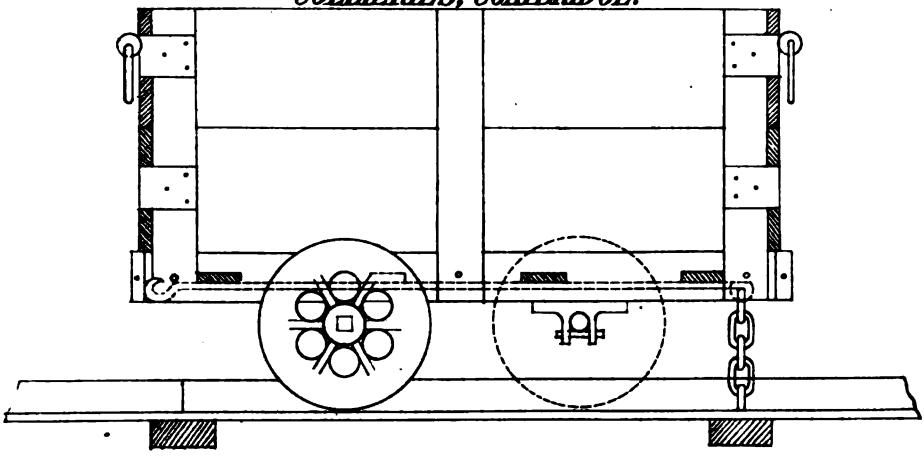

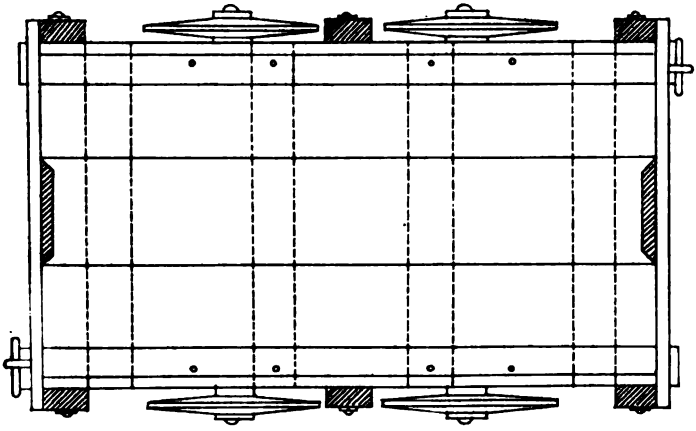

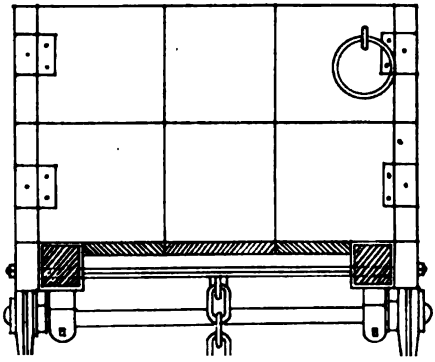

EXPLANATION RELATIVE TO PLATE L.

Name of Colliery,	TOWNLANDS AND BACKMUIR, HAMILTON.
Owners, ...	CLYDE COAL CO. (LIMITED).
Height of Seam, ...	4 ft. to 7 ft.
Mode of Working, ...	Stoop and room.
Inclination, ...	1 in 9 to flat.
Type of Rails, ...	Bridge Rails.
Gauge of Rails,...	2 ft.
Mode of Haulage, ...	Horse; tail rope, and self-acting inclines.

Details of Hutch—

Tare, ...	6½ cwts.
Net, water measure, ...	12½ cwts.
„ as usually filled, ...	12 to 15 cwts.
Length of Hutch, inside, ...	5 ft.
Width, „ „	2 ft. 11 in.
Depth, „ „	1 ft. 8½ in.
Wheels, diameter, ...	10 in.
„ between centres, ...	1 ft. 6 in.
Trams, larch, ...	5 ft. 6in. by 5 in. by 4½ in.
Slots, oak, ...	3½ in. by 2½ in.
Starts, angle iron, ...	1½ in. by 1½ in by ¼ in.
Cleading, ...	bottom, 1 in. larch; sides, ½ in. iron.
Drawbars, ...	2 in. by ½ in.
Axles, ...	1½ in. diameter.

Archd. Baird & Son's Estimate of Cost, ...	£5 2 6
Hurst, Nelson & Coy.'s „ ...	2 17 0

HUTCH USED AT TOWNLANDS & BACKMUIR COLLIERIES, HAMILTON.

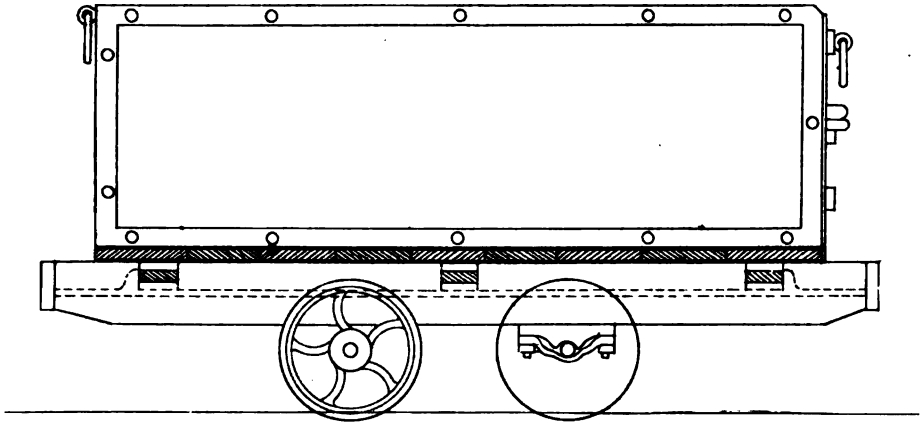

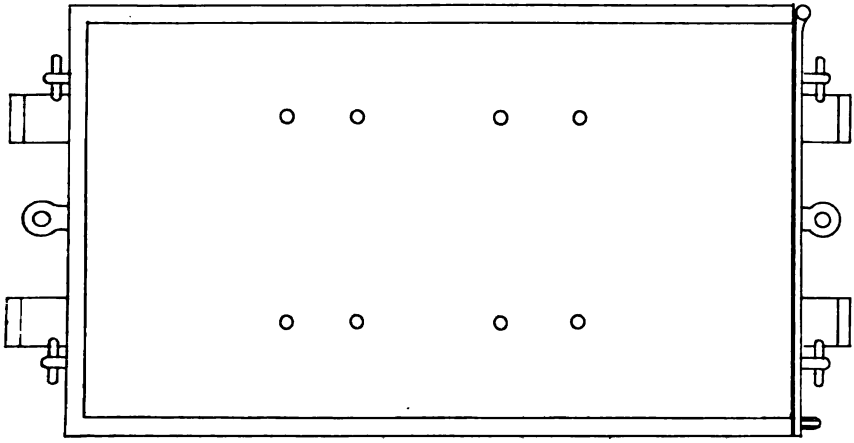

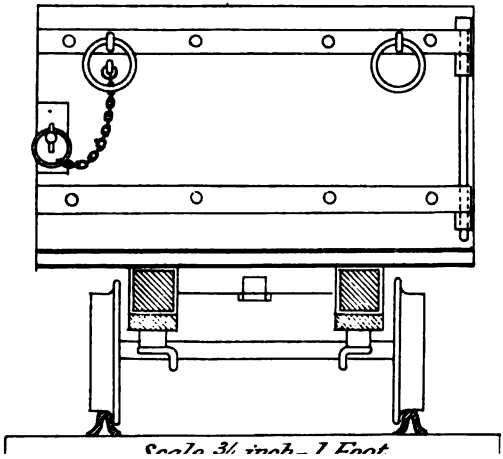

Scale 3/4 inch = 1 Foot

EXPLANATION RELATIVE TO PLATE LI.

Name of Colliery, ...	TRANENT.
Owners, ...	JAMES WALDIE & SONS.
Height of Seam.	4 ft. to 6 ft.
Mode of Working, ...	Stoop and room.
Inclination, ...	1 in 9 to 1 in 20.
Type of Rails, ...	Tram Rails.
Gauge of Rails, ...	2 ft. 6 in.
Mode of Haulage, ...	Tail-rope.
Details of Hutch—	
Tare, ...	4½ cwts.
Net, water measure, ...	5 cwts.
„ as usually filled, ...	8 cwts.
Length of Hutch, inside, ...	3 ft. 8 in.
Width „ „	2 ft. 6 in.
Depth „ „	1 ft. 6 in.
Wheels, diameter, ...	1 ft.
„ between centres, ...	1 ft. 8 in.
Trams, larch, ...	3 ft. 8 in. by 6 in. by 2½ in.
Slots, „	5 in. by 2 in.
Starts, oak, ...	3 in. by 2½ in.
Cleading, Scotch fir, ...	1½ in. thick.
Drawbars, ...	2½ in. by ½ in.
Axles, ...	1½ in. diameter.

Archd. Baird & Son's Estimate of Cost, ...	£1 17 6
Hurst, Nelson & Coy.'s „ ...	2 6 6

HUTCH USED AT TRANENT COLLIERY, TRANENT.

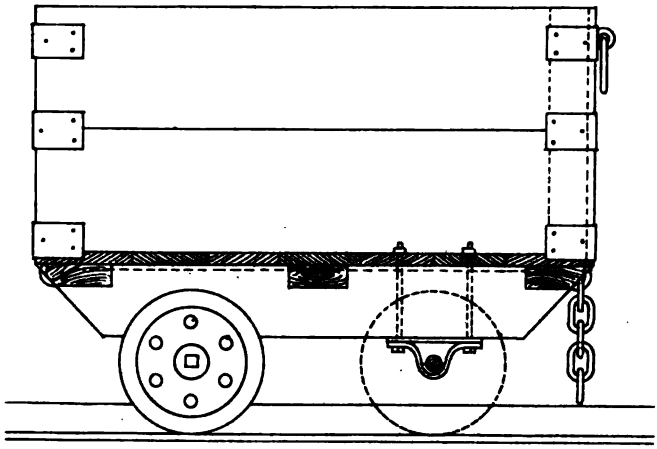

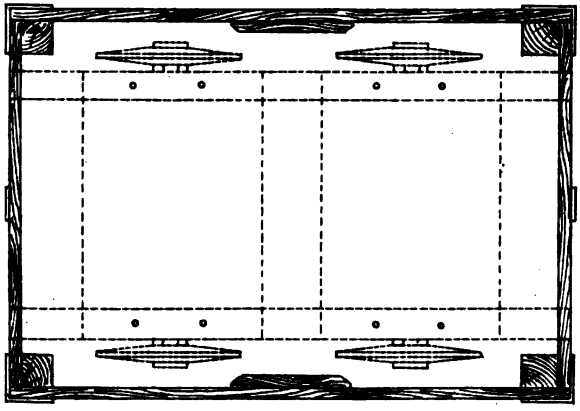

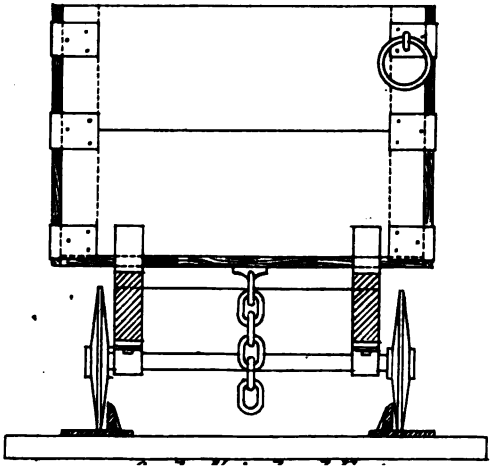

EXPLANATION RELATIVE TO PLATE LII.

Name of Colliery, ...	WELLHALL, HAMILTON.
Owners, ...	CLYDE COAL CO. (LIMITED).
Height of Seam, ...	3 ft. 9 in. to 4 ft. 6 in.
Mode of Working, ...	Stoop and room.
Inclination, ...	Flat.
Type of Rails, ...	Bridge Rails.
Gauge of Rails, ...	2 ft.
Mode of Haulage, ...	Manual; horse.
Details of Hutch—	
Tare, ...	$5\frac{1}{4}$ cwts.
Net, water measure, ...	10 cwts.
„ as usually filled, ...	10 to 12 cwts.
Length of Hutch, inside, ...	4 ft. 10 in.
Width „ „	2 ft. 10 in.
Depth „ „	1 ft. 4 in.
Wheels, diameter, ...	10 in.
„ between centres, ...	1 ft. 6 in.
Trams, oak, ...	5 ft. 6 in. by 5 in. by 4 in.
Slots, oak, ...	$3\frac{1}{2}$ in. by $2\frac{1}{2}$ in.
Starts, iron, ...	3 in. by $\frac{3}{8}$ in.
Cleading, larch, ...	1 in. thick.
Drawbars, ...	2 in. by $\frac{1}{2}$ in.
Axles, ...	$1\frac{1}{2}$ in. dia.

Archd. Baird & Son's Estimate of Cost, ...	£2 7 6
Hurst, Nelson & Coy.'s „ ...	2 10 6

HUTCH USED AT WELLHALL COLLIERY, HAMILTON.

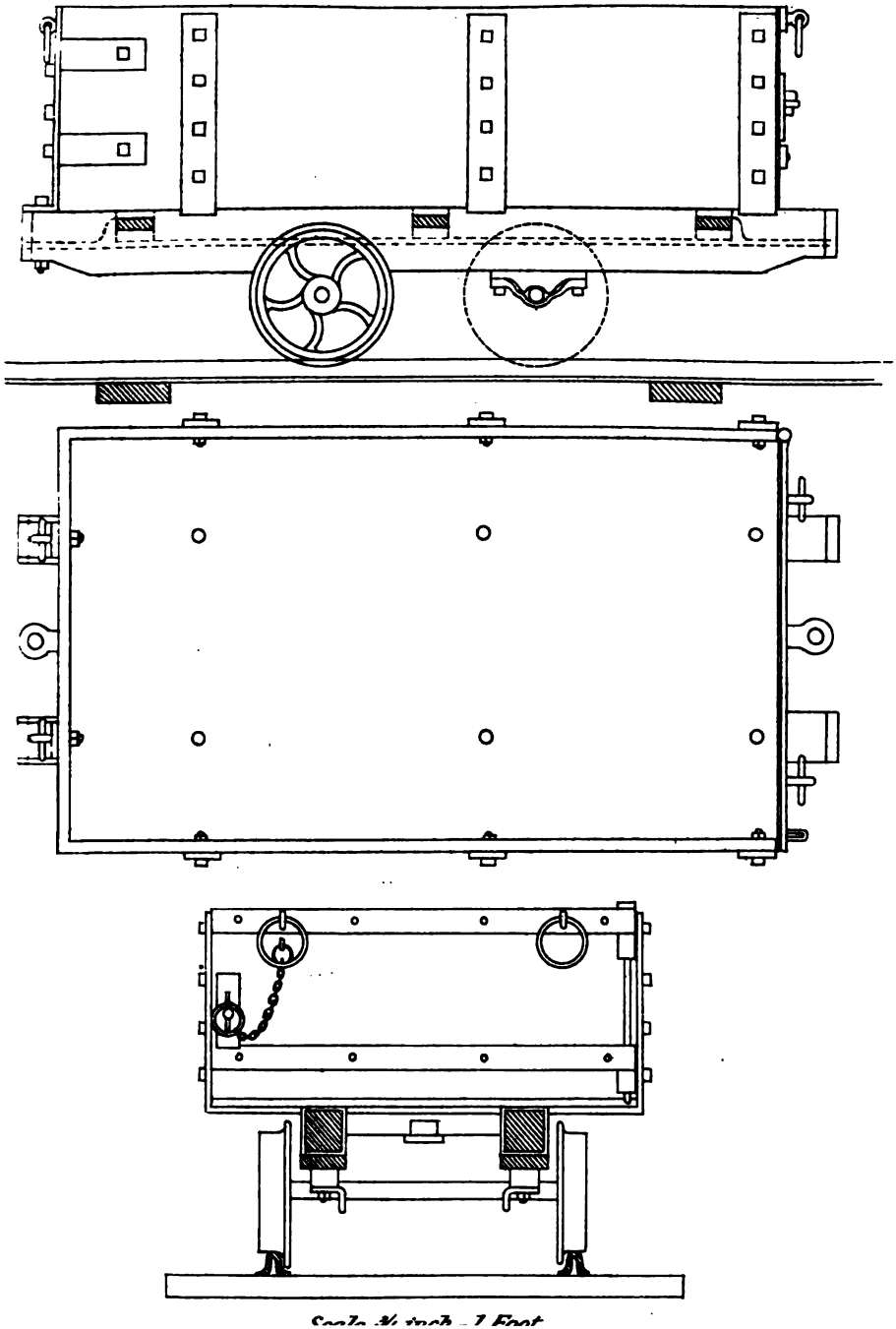

Scale ¾ inch = 1 Foot

EXPLANATION RELATIVE TO PLATE LIII.

Name of Colliery, ...	WELLSHOT, CAMBUSLANG.
Owner, ...	DAVID G. DUNN.
Height of Seam, ...	
Mode of Working, ...	
Inclination, ...	
Type of Rails, ...	
Gauge of Rails, ...	
Mode of Haulage, ...	Manual, horse.
Details of Hutch—	
Tare, ...	
Net, water measure, ...	
„ as usually filled, ...	
Length of Hutch inside, ...	4 ft. 3 in.
Width „ „	2 ft. 4⅜ in.
Depth „ „	1 ft. 3 in.
Wheels, diameter, ...	1 ft. 2 in.
„ between centres, ...	1 ft. 7 in.
Trams, oak, ...	4 ft. 7 in. by 3½ in. by 3 in.
Slots, ...	3½ in. by 1½ in.
Starts, ...	3½ in. by 1¾ in.
Cleading, steel plates, ...	⅛ in.
Drawbars, ...	2 in. by ½ in.
Axles, ...	1⅛ in. diameter.

Archd. Baird & Son's Estimate of Cost, ...	£3 0 0
Hurst, Nelson & Coy.'s „ ...	3 0 0

HUTCH USED AT WELLSHOT COLLIERY, CAMBUSLANG.

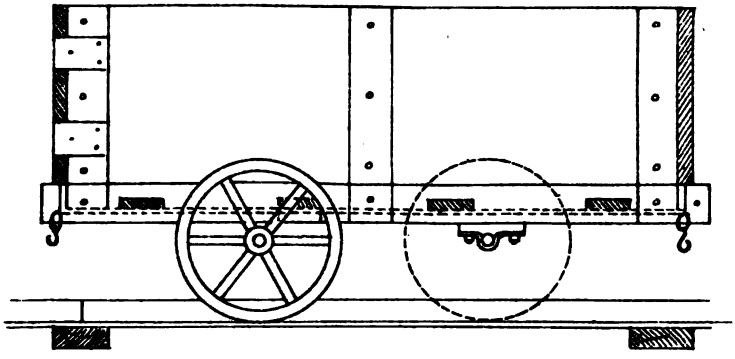

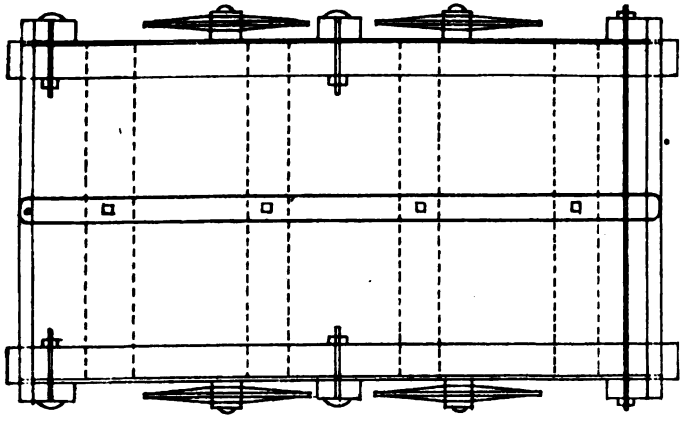

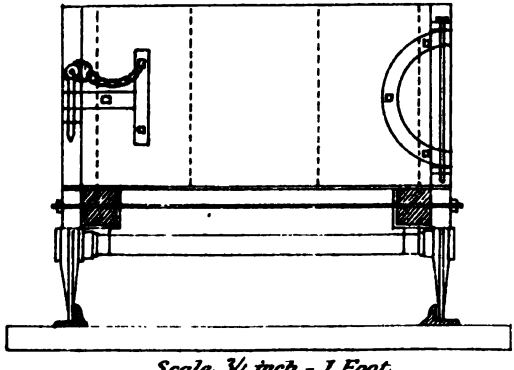

Scale 3/4 inch = 1 Foot

EXPLANATION RELATIVE TO PLATE LIV.

Name of Colliery, ...	WEMYSS COLLIERY, DYSART.
Owner, ...	R. G. E. WEMYSS.
Height of Seam, ...	5 ft. 6 in. to 12 ft.
Mode of Working, ...	Stoop and room, and Longwall.
Inclination, ...	1 in 3½ to 1 in 8.
Type of Rails, ...	Edge Rails.
Gauge of Rails, ...	2 ft. 1 in.
Mode of Haulage, ...	Manual, horse, and endless rope.

Details of Hutch—

Tare, ...	3¾ cwts.
Net, water measure, ...	7 cwts.
„ as usually filled, ...	7½ to 8 cwts.
Length of Hutch, inside, ...	3 ft. 6 in.
Width „ „	2 ft. 6 in.
Depth „ „	1 ft. 6 in.
Wheels, diameter, ...	10 in.
Do. between centres, ...	1 ft. 2 in.
Trams, elm, ...	3 ft. 10 in. by 5½ in. by 2¼ in.
Slots, „	3½ in. by 2¾ in.
Starts, „	3½ in. square.
Cleading, Scotch fir, ...	1⅛ in. thick.
Drawbars, ...	1¾ in. by ⅝ in.
Axles, ...	1⅜ in. diameter.

Archd. Baird & Son's Estimate of Cost, ...	£2 0 0
Hurst, Nelson & Coy.'s „ ...	2 10 6

HUTCH USED AT WEMYSS COLLIERY, FIFESHIRE.

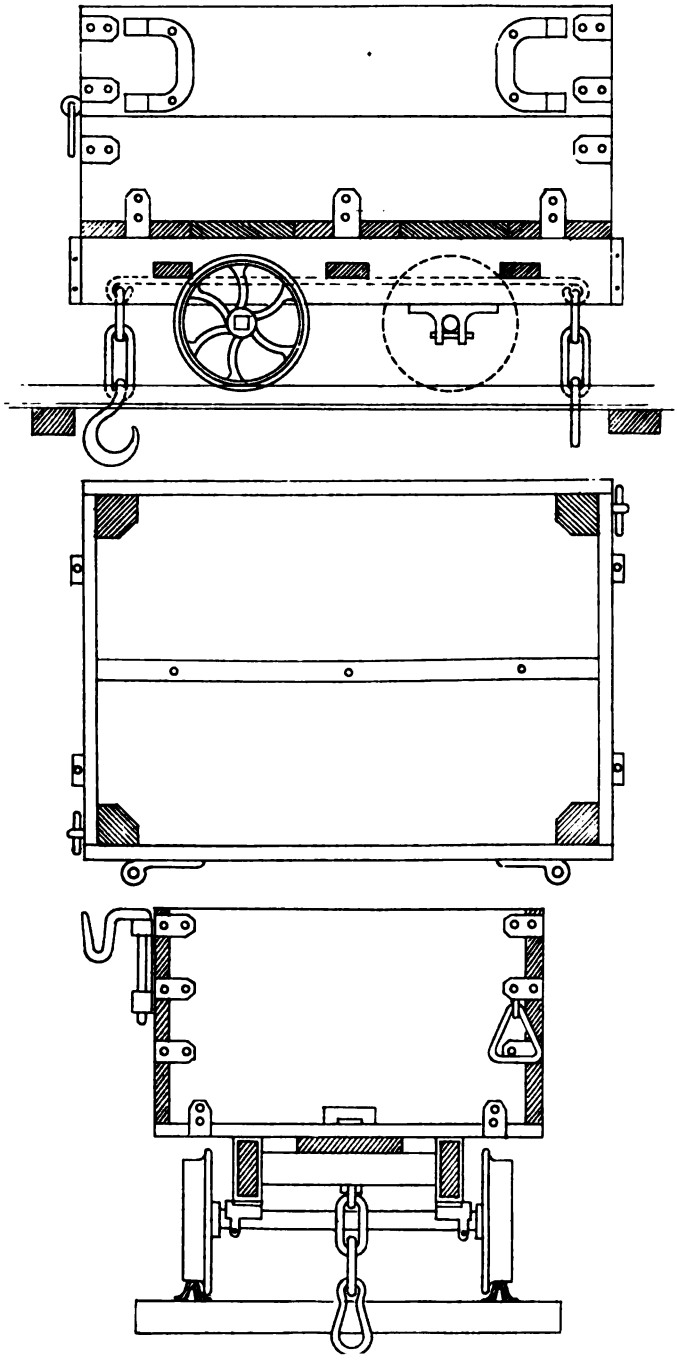

INDEX OF COLLIERIES

WHERE THE HUTCHES SHEWN ON PLATES XIV. TO LIV. ARE IN USE.

Hutch used at—	Number of Plat
Auchinraith,	XIV.
Ayr,	XV.
Backmuir,	L.
Bent,	XVI.
Bonniehill,	XVII.
Blantyre,	XVIII.
Boghead,	XIX.
Bothwell Castle,	XX.
Cadder,	XXI.
Cadzow,	XXII.
Carronhall,	XXIII.
Coltness,	XXIV.
Dalbeath,	XXV.
Dechmont,	XXVI.
Devon,	XXVII.
Farme,	XXVIII.
Fence	XXIX.
Gilbertfield,	XXX.
Gilmerton,	XXXI.
Greenfield,	XXXII.
Hill of Beath,	XXXIII.
Kelty,	XXXIV., XXXVIII.
Kilsyth Coal,	XXXV.
Kilsyth Ironstone,	XXXVI.
Knownoble,	XXXVII.
Leven,	XXXVIII.
Neilston,	XXXIX.
Nethercroy,	XLVII.
Newliston,	XL.
Newton,	XLI.
Niddrie,	XLII.
North Motherwell	XIV.
Palace,	XVI.
Pentland,	XLIII.
Pirnie,	XLIV.
Quarter,	XLV.
St. Helens,	XLVI.
Shieldhill,	XLVII.
Springhill,	XLVIII.
Summerlee,	XLIX.
Townlands,	L.
Tranent,	LI.
Wellhall,	LII.
Wellshot,	LIII.
Wemyss,	LIV.
Whitehill,	XXXII.

CALIFORNIA STATE
Mining Bureau.
SAN FRANCISCO.

MANCHESTER SHIP CANAL.

THE accompanying woodcut shews the Eastham Locks at the Liverpool end of the Manchester Ship Canal. It was intended that this drawing should have illustrated the description of the visit of the Institute there (see pp. 85-88), but it was not received in time.

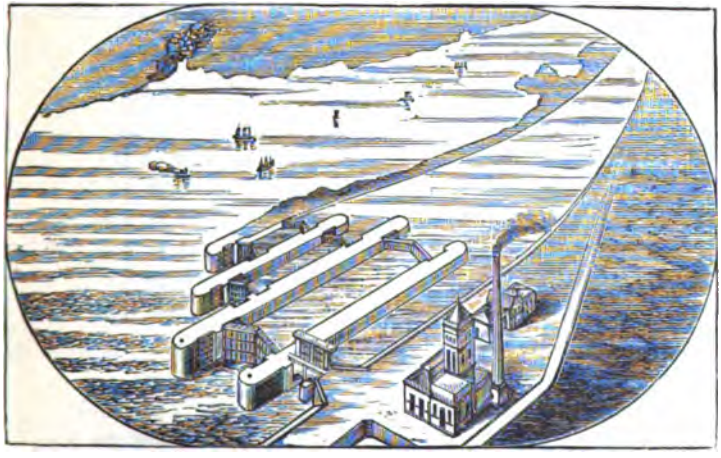

MANCHESTER SHIP CANAL—EASTHAM LOCKS.

EXPLANATION RELATIVE TO PLATE LV.

Name of Colliery, ...	LONGRIGGEND COLLIERY.
Owners, ...	JAMES NIMMO & COY.
Height of Seam, ...	2 ft.
Mode of Working, ...	Longwall.
Inclination, ...	Varies from level to 1 in 10.
Type of Rails, ...	Tram Rails.
Gauge of Rails, ...	1 ft. 8 in
Mode of Haulage, ...	Manual and tail-rope.

Details of Hutch—

Tare, ...	3 cwts.
Net water measure, ...	6 cwts.
Do. as usually filled, ...	9 cwts.
Length of Hutch inside, ...	3 ft. 10 in.
Width " "	2 ft. 8 in.
Depth " "	1 ft. 2 in.
Diameter of Wheels, ...	10½ in.
Wheels between centres, ...	1 ft. 4 in.
Trams, larch, ...	4 ft. by 5½ in. by 3 in.
Corner standards, larch, ...	3 in.
Cleading, Scotch fir, ...	1 in. thick.
Drawbars, ...	1½ in. by ⅝ in.
Axles, ...	1⅜ in. dia.

The axles turn in the cods, and the wheels turn in the axles.

NOTE.—The above, with accompanying drawing, was received too late to be included in the list of hutches recently issued.

HUTCH USED AT LONGRIGGEND COLY. SLAMANNAN.

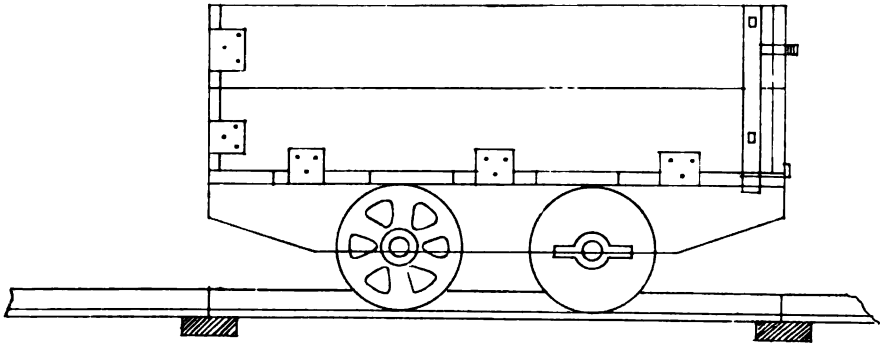

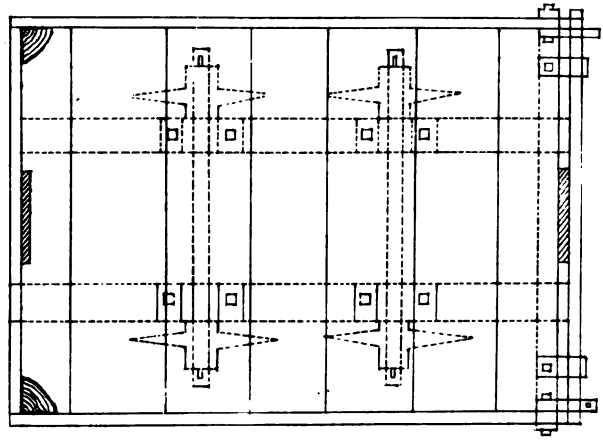

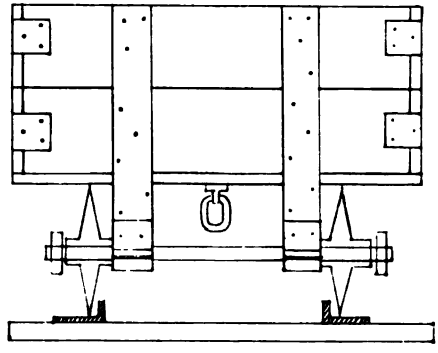

Scale 3/4 inch = 1 Foot.

THE MINING INSTITUTE OF SCOTLAND.

GENERAL MEETING,

HELD IN THE

HALL OF THE INSTITUTE, HAMILTON,

8th October, 1891.

J. B. ATKINSON, Esq., President, in the Chair.

The minutes of the last General Meeting were read by the Secretary, and confirmed.

The following were elected by ballot as ordinary members :—

RICHARD KIRKBY, Kirkland, Leven.
JOHN GLEN, Connell Terrace, Airdrie.
EDWARD POTTER, Drumshangie Colliery, Airdrie.
WM. RIDDELL, Drumshangie Colliery, Airdrie.
PETER MAXWELL, Shieldhill Colliery, Falkirk.
ARCHD. SMELLIE, Coneypark Colliery, Kilsyth.
GEORGE M'KENZIE, Drumshangie Colliery, Airdrie.
ALEX. STEEL, Lanemark Colliery, New Cumnock.
JOHN BARR, Rawyards Colliery, Airdrie.
WM. MARSHALL, West Benhar Colliery, Whitburn.
DANIEL STEWART, West Benhar Colliery, Whitburn.
ALEX. STEWART, West Benhar Colliery, Whitburn.
HUGH P. BUNTON, Halbeath Colliery, Dunfermline.

The following discussions then took place :—

DISCUSSION OF MR DUNDAS SIMPSON'S PAPER ON "WORKING KILTONGUE COAL SEAMS IN TWO DIVISIONS."

THERE being no further remarks offered on this subject, the discussion was closed, and on the motion of the PRESIDENT, Mr Simpson was awarded a vote of thanks.

DISCUSSION OF MR WM. ARCHIBALD'S PAPER ON "PUMPING."

MR ARCHIBALD, in answer to the President, referred to the very valuable notes by Mr Forgie, whose paper was so detailed with the practical results of the coal consumed, the effective power got out of the engine, and the cost per ton of water raised, he (Mr Archibald) did not know that he could say anything that would enhance the value of his remarks in the least. They would observe that he even gave the quantity of ashes made in a given time. Mr Malcolm had sent a few supplementary remarks from Haywood which enhanced the value of the original paper. He claimed some benefit from the condenser valve being fixed instead of being loose on the spindle. He also found the change from loose valves to fixed valves had something to do with the increased register of the vacuum gauge on the machine. He (Mr Archibald) thought that was an inaccurate hypothesis altogether. Referring to the saucer guards, the speaker said he was of opinion that the holes were not an advantage to the life of the valves.

Mr HASTIE said Mr Archibald did not mention the steam pressure in the boiler.

Mr ARCHIBALD said the pressure in the boilers was about 50 lbs. to the square inch.

Mr ARNOTT said Mr Archibald had said the engine in question was made by Turnbull, Grant & Coy. of Glasgow. At Clyde

Ironworks they had an engine made by Barclay fully twenty-five years ago exactly similar. The only difference was, while the one described was 12-ft. stroke, theirs had a 13-ft. stroke.

Mr HASTIE said there was one at Greenfield which had been put aside for want of a balance.

Mr ARNOTT said at Clyde they had no difficulty on this account. It had gone all the time mentioned.

The PRESIDENT—Is the Clyde engine balanced?

Mr ARNOTT—No.

Mr ARCHIBALD said it all depended on how they throttled the steam in going into the engine. If their rods were well balanced they economised steam thereby, and he had not the least doubt the engine referred to, although doing good work, would be the better of a back balance. It would use less steam.

Mr MOWAT asked how the pump rods in the shaft were guided.

Mr ARCHIBALD said in a direct acting engine such as this there was no radius in the rods, and they were very easily kept in position. They had ordinary collarings which kept them in their place. There was little trouble, because they wrought perpendicularly.

Mr MOWAT asked if they would not rub on the side.

Mr ARCHIBALD—Yes, but at different parts we put in rollers. Sometimes these did not go long, due to the small spindles. Where there was little pressure they ran for a long time inside the collarings.

Mr M'LAREN said he supposed where these rollers were quickly worn, there must have been great pressure from the rods.

Mr ARCHIBALD answered in the affirmative. Referring to Mr Malcolm's remarks about the valves at Haywood, he had not pointed them out as model valves in any sense. In fact, they were the reverse, and the valve Mr Malcolm mentioned as being better had also got out of date.

Mr WADDELL asked what Mr Archibald considered the best valve.

Mr ARCHIBALD said nothing but experience would prove that, but the ordinary flat valve they were dealing with at Haywood was not the best. The valve, shown on the accompanying figure,

is supposed to be about the best valve going just now. He had no experience of it, and was merely taking the maker's word for

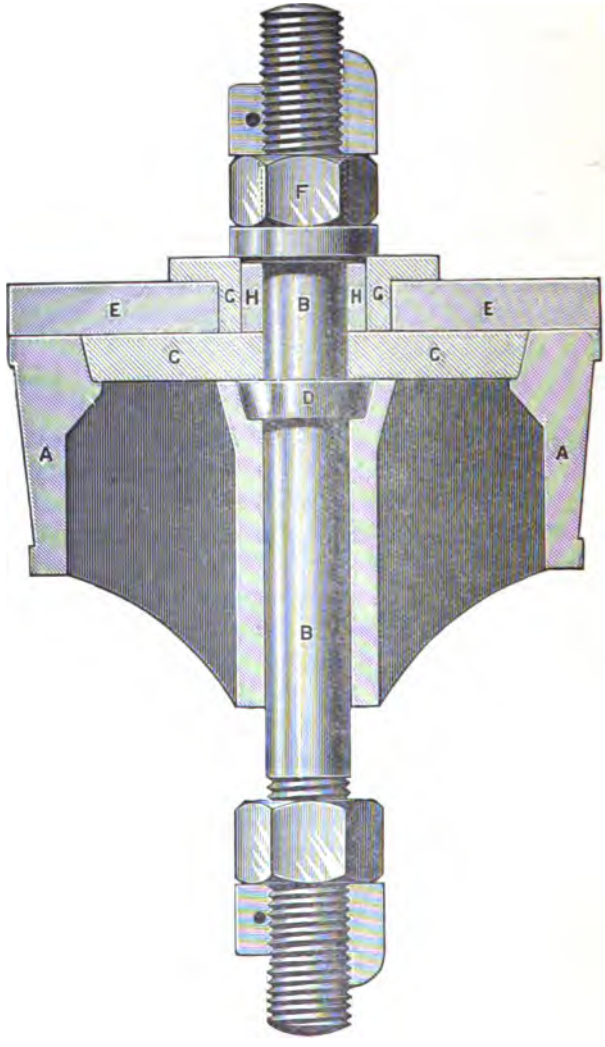

it, but he believed it was working in Daldowie and doing good work.

A is a cast iron seat, with brackets cast across its diameter to support a centre piece, which is bored out sufficiently large to admit the holding down bolt, B.

B is the holding down bolt or spindle which keeps the clack in its position, and regulates the amount of lift required. It is made of brass, and must be turned to fit accurately into the hole bored out in the centre of A, through which it moves during the opening and closing of the clack.

C is the valve clack, also made of brass, turned on the top and round its edge to fit closely into the seat A.

D is a bracket on B.

E is an indiarubber disc, made of sufficient size to overlap C, to prevent any leakage.

G is a sort of stuffing-box made of brass, with broad flange, to strengthen E while the clack is being lifted.

H is a ring of indiarubber for packing.

C, E, G, and H are screwed tight down on the bracket D by the jam nut F.

The length of screw on each end of the spindle is generally about 5 inches, with 6 threads to the inch for a 12-inch diameter clack.

The PRESIDENT closed the discussion, and moved a vote of thanks to Mr Archibald, which was accorded.

DISCUSSION OF MR ROBERT MARTIN'S PAPER ON "COAL-CUTTING MACHINERY AT WESTBURN COLLIERY."

The SECRETARY read the following communication from Mr Henry Rowan:—Questions have been asked as to the comparative cost of coal got by machine and by hand labour, but, unless an elaborate statement of the whole circumstances be given, the answers may be very confusing. For instance, if we were to get a statement as to the results in a seam such as the Ell coal of the Hamilton district, we would be inclined to say that the machine was a complete failure; but taking the same seam in the

Cambuslang district, the coal-cutting machine would be considered a step in the right direction. There is no doubt of this, that the machine has a field of usefulness; but it has sometimes been applied outside that field, and has in consequence been pronounced a failure. I would say that in a seam where a man can produce 3½ to 4 tons, our machines will not reduce the cost per ton, and might possibly increase it; but taking seams in which the product is 1½ to 2½ tons per man, it will be found that the application of a machine will effect a considerable saving. There are collieries with seams to which a machine could be applied throughout with good results financially; and there are a great number of collieries with sections or districts which the miners dub the "Poorhouse," or the "Strangers' Home," from the coal being very difficult to get, and if a machine were applied to such a district, it would be found to reduce the cost very decidedly. We had a section of Splint coal in a pit where the price per ton was gradually increased until it stood at 2s 6d (wages were 4s per day), but could not get men to work it at that figure. We had compressed air close at hand, and applied a machine, and we then got the coal filled and drawn for 1s 3d per ton. If we add 2d for machine men, and 2d for power, &c., the cost is 1s 7d, as against 2s 6d—a saving of 11d per ton. This was an exceptional place, but it serves to show the usefulness of the coal-cutting machine. There is also a saving in that a larger percentage of round coal is got by machine than by hand labour; but in a seam with a bad roof, the difficulties are very much greater with a machine than when worked by hand labour, because of the room required to pass the machine along the face. Compressed air at a colliery, notwithstanding its high cost of production, has a great many points to recommend its adoption, because it can be applied readily to pumping, haulage, or coal-cutting machinery; and I would say it is an exceptional colliery which, having compressed air, could not at times apply a coal-cutting machine to great advantage.

Mr Geo. A. Mitchell said he did not find in Mr Martin's paper any reference to the cost of the upkeep of the machine. Perhaps he could give some idea as to that. He understood this was a serious item with machinery of this description.

Mr Martin said he was sorry he was not able to give the exact

figures. The account books were not kept in such a way as to separate these items, but he did not think, from his experience, it could be said to be a serious item. He did not think he was out of the way in putting it at 1d a ton.

The PRESIDENT asked if smashing of the machinery was frequent.

Mr MARTIN answered in the negative. When working with cast-iron frames they had trouble, but fitting a cast-iron frame with two good malleable iron bars was not very serious. Steel frames had been introduced with good results.

The PRESIDENT asked if it would take the whole time of one smith to keep the machine in order.

Mr MARTIN answered in the negative. He thought their man did other work.

Mr ARNOTT said they would have their idle day for repairs.

Mr MARTIN said an idle day was sometimes an advantage.

Mr M'LAREN, referring to p. 79, pointed out that his reference to cost was a matter of hearsay, and that Mr Martin had taken it for granted. He (Mr M'Laren) made inquiry into the point several years ago, and found when wages were at 3s 6d to 4s a day coal cutting machines did not pay, and that it was only when wages were high, as at present, that the machines paid.

Mr ARCHIBALD said he thought it might clear the discussion if he gave some facts. As it stood just now, speaking from actual figures, without putting them before them, the machine cost 2d to 3d per ton more than the work could be done by a good practical miner. Then, in their ordinary workings, they recovered the timber, while in this it was lost, and he had not taken that into account. However, he did not know that the machine was altogether to blame for that. The machine where it was working was not getting fair play. On account of the thickness of the seam, the results were against it. In the Virgin seam, which they happened to be opening up, where the holing was very hard, and which was very much thinner, he believed they would be able to make it a commercial success. As to the upkeep of the machine, he thought his friend who had mentioned a man as having been fully employed at it was not far off the mark.

CALIFORNIA STATE

The PRESIDENT asked if Mr Archibald in his estimates of 2d to 3d per ton made any allowance for the better size of coal got.

Mr ARCHIBALD—No. Against that had to be put the driving of cross roads and upkeep of the ordinary longwall roads. That was more expensive than in stoop-and-room workings. The difference he had given was fair and accurate against the machine.

Mr MITCHELL said he had made up from Mr Martin's figures roughly what the cost was, viz.: 1s for drawing and filling, 2d for fuel, 3d for cutting, and 1d for upkeep; total, 1s 6d. If that was accurate it could not be worked at that by ordinary hand labour.

Mr ARCHIBALD said if Mr Mitchell could get it done as cheap as that the sooner he was at Westburn the better. The ordinary cutting cost 5d per ton. The work was contracted, the man who worked the machine being paid on the whole produce, and the more he took out of this longwall face the better for himself. His contract price was 5d per ton, and the breaking out price was considerably above the figures quoted by Mr Mitchell.

The PRESIDENT—What would a miner do the work for?

Mr ARCHIBALD—There is the brushing over and above this in the longwall. It is not required in the stoop-and-room workings.

Mr MARTIN asked Mr Archibald if he was comparing the price of stoop-and-room hand labour with the machine, or the machine and hand labour on the same walls.

Mr ARCHIBALD—Taking the field as a whole.

Mr MIDDLETON said he knew the place in 1880 when the longwall was tried under the same conditions as those in which the machine was started in 1888, and the price paid to miners when wages were 5s 3d per day was 1s 9d for round coal and 4d for dross, and 7s per fathom, or 3½d on the gross ton, and 5d for brushing and keeping up the roads. Mr Martin could make up whether that was 75 per cent. over the machine cost. The machines had never had a fair chance.

Mr MARTIN said he would have to take a little time to think over all this. With regard to what Mr Archibald had said, if he

meant that the coal could be worked cheaper stoop-and-room, taking the whole seam in Westburn, than by machine, he agreed with him, and that it could be done for 2d or 3d a ton less; but, they must understand, this Ell seam had a good thick camper. They worked a 3 feet seam where the machine was working, but in another part they holed all the free coal under the camper, and very good holing it made. There was no doubt it could be worked cheaper stoop-and-room the whole thickness, but the quality of the coal was very different. He should like Mr Archibald to say if that was what he meant.

Mr ARCHIBALD said the results he had given referred to the whole seam working stoop-and-room.

Mr MARTIN—But the point is, if you have a 3 feet seam, can you work it cheaper by hand than by the machine?

Mr ARCHIBALD—I have given facts which cannot be disputed, and certainly here the machine is out of place. A seam 3 feet thick and upwards with an ordinary holing can be worked by hand labour cheaper.

Mr M'LAREN—Will Mr Archibald make up what would be the cost of working 3 feet by hand as compared with the machine?

Mr MARTIN said of course the question of a machine or no machine did not lie generally with the manager. The man who owned the colliery decided that.

Mr ARCHIBALD said in the 3 feet seam, where there was a hard holing, the machine was shown to advantage. In this case, there were ten faces in the upper portion of the Ell coal which would be near the camper and have very good holing. In fact, it could almost be done about as cheaply without the machine in this particular part. He granted that in the seam where the coal was extremely hard, the machine would show to better advantage.

Mr MITCHELL asked if the machine would cut more than 120 yards on both sides.

Mr MIDDLETON said the machine would only cut on one side, where the pillars in the Main coal were all out; but on the other side, where the Main coal pillars were not out, whenever the machine got into a place where the pillars in the Main coal were still in, the coal crushed down on the top of the machine, and it

had then to be redd out, which retarded its progress very much, besides giving a very large percentage of dross. On the other hand, when the machine was going over a room, the coal, for want of the resistance below, stuck to the roof, and had to be blasted down. On the whole, work could not be taken out of the machines where the Main coal pillars were in. At page 78 and line 15, Mr Martin said the percentage of gum got by cutters and breaking out was 20. The highest percentage of round coal got in his (Mr Middleton's) time was 74¾ % of what was sent to the pithead. Besides the dross got on the surface, there was 11 per cent. of the working thrown into gum by the cutters, and which was stowed in the waste. The cost for the working in 1888 was 1s 4d per ton for stoop-and-room places 12 feet wide. The cost for machine places was—

For stripping walls and putting coal into lye. - -	0s 11½d
,, brushing and building, - - - - -	0s 4d
,, working machine and stowing gum, - - -	0s 4d
	1s 7½d

Nominal wage, 4s per day.

Mr MARTIN said the machine ran in his time in the "sagged" coal. It made no difference so far as he was concerned, and his reason for having one instead of two machines was because he could work it cheaper and have a larger output from the stoop and room and stooping.

Mr ARCHIBALD, replying to a question, said it was quite common to cut 400 and 420 feet per shift. He forgot to mention what Mr Middleton had referred to—viz., where the Main coal was out underneath and the pavement of the Ell coal stood, the machine in that case did not work to advantage. Just now, they were in course of having the pillars taken out of the Main coal; this lowered the pavement in the Ell coal, and they worked some of that by hand, because of the undulating pavement, which told further against the machine.

The PRESIDENT said they had had a very interesting discussion on the question of coal cutting, and it was a very important matter. They could not very well discuss it without going into costs. He thought they had got some information on that head.

Mr MIDDLETON said he wished to point out that Mr Martin had made two or three mistakes in his paper. At p. 76, line 3, he gave the cylinders at 20 in. dia. and 48 in. stroke, whereas the correct figures were 22 in. and 42 in. The air cylinders were given at 16 in., but should be stated at 22 inches; they were all alike the same stroke and driving tandem. The air was said to be forced into a receiver or boiler 30 ft. by 5 ft., but it was 30 ft. by 5½ ft., and the pipes were 10 in. instead of 9 in., the main pipes being 6 in. instead of 4 in.

Mr MARTIN said this was the mischief of trusting to memory.

The discussion was adjourned.

DISCUSSION OF MR ROBERT M'LAREN'S PAPER ON "BORING MACHINE FOR TAPPING WASTES."

Mr M'LAREN corrected a mistake on p. 82, viz., "groove *b b*" should read "groove *l l*," and said—In reference to Mr Martin's question at page 83, which I understand refers to the inflow from wastes when tapped, I have to state that the paper read gives full details of the machine, and there is nothing connected with it for such a purpose. Although opening up a new subject, I will briefly describe the method adopted by Mr Nisbet, manager at Devon Colliery, for taking off the water. He tapped the waste, and successfully carried out the arrangements for draining and pumping the water. Previous to tapping the waste, a large hole was drilled in the coal and a large wood plug 10ft. long by 9in. dia., inserted, and made water-tight. Into this plug was fixed a pipe, 4in. dia., on which was fitted a Glenfield valve, also 4in. dia., and into this the rods turned, being worked by the machine. When the inside "break" was reached the boring proceeded slowly, and as soon as the coal was thin enough to allow the pressure to force the water through, the machine moved suddenly forward, and the weight fell to the pavement. The valve was then shut down and the machine disconnected, after

which the valve was eased and the rods withdrawn. A deal of water escaped while the valve was resting on the rods, but as soon as they were out the valve was closed and no more water escaped. The whole process occupied less than five minutes. Another method might have been adopted in lieu of that first described, viz.: To the face of the valve fix a pipe, from 4ft. to 9ft. long, according to the length of drill in use, with a small branch on the underside fitted with a blow-off cock of such a size as to allow the *debris* made by the drill to be discharged. On the outer end of the pipe let there be a stuffing box and gland fitted and packed in the ordinary way. Through this box the rods will work and be perfectly tight. As soon, therefore, as the waste is tapped, the rods can be withdrawn, and when the drill is up against the packing, the valve can be shut, and the gland taken off to get out the drill. In this way there is no escape of water. This method would be useful where gas is expected.

The PRESIDENT closed the discussion, and on his motion, Mr M'Laren was accorded a vote of thanks.

The following paper on "Hutch Wheels" was then read by Mr George A. Mitchell:—

HUTCH WHEELS.

By George A. Mitchell.

In submitting to the Institute a paper on hutch wheels, I may say at the outset that I do not pretend to treat the subject exhaustively. I only take up some points that occur to me as interesting, both from a practical and theoretical point of view. These mainly have reference to the different causes of friction in the traction of hutches, and they will be already familiar to many of the members. I shall speak only very generally regarding the construction of hutch wheels; and it is perhaps worth while suggesting that some one might with advantage read a paper on this particular branch of the subject. We are very apt to use particular patterns of wheels because we have been in the habit of using them, or because others use them, and very probably many of the wheels in use are not either theoretically or practically of the best pattern, or fitted together in the best way.

Hutch wheels are, in their essence, narrow cylinders of metal rolling upon metal. No friction in the ordinary sense opposes this rolling. It is only opposed by the minute inequalities of the surfaces in contact, and it is from these inequalities that the force originates which would bring to rest a cylinder rolling upon a smooth surface. By smooth surface I mean a surface *practically* not *theoretically* smooth. This is readily seen by exaggerating the inequalities as in Fig. 1.

Suppose, for example, to take the simplest possible case, that the cylinder has come to the inequality A, which is higher than the general plane of the smooth surface, then, as there is some distance between the perpendicular line OC and A, there is a force produced tending to bring the cylinder to rest, equal to the moment of W about the point A, where W represents the weight of the cylinder. With a steel wheel rolling upon a steel rail, the resistance to rotation caused by this form of friction is very small indeed, and may almost be left out of account.

The friction that is of most serious amount *theoretically*, in connection with hutch wheels is the friction between the axles of the wheels and their bearings.

Fig. 2 represents a hutch pedestal, and axle. Let F = friction resisting rotation on each axle; α = angle of repose for the

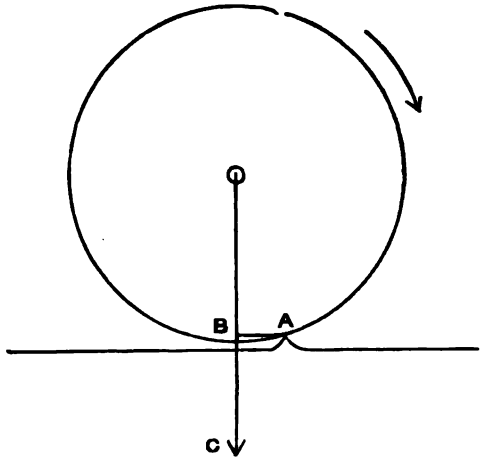

Fig. 1.

metals in contact; R = resultant of forces acting as between the

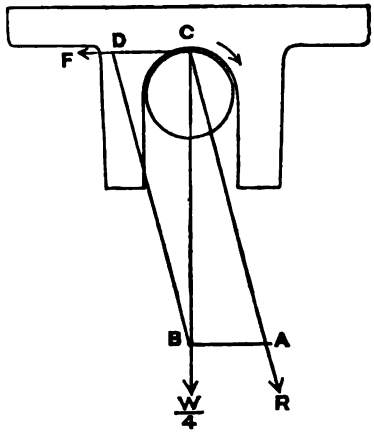

Fig. 2.

pedestal and axle, when the wheel is about to begin rotation;

$\frac{W}{4}$ = weight acting on the axle = one-fourth of the weight of the hutch.* When the axle is about to turn, the direction of R will make the angle α with CB, the perpendicular through the centre. Then $F = R \sin \alpha$, but R is the resultant of $\frac{W}{4}$ and the force acting parallel to the line of the two axles, and just sufficient to move the hutch, and therefore $R = \frac{\frac{W}{4}}{\cos \alpha}$

Therefore $F = \frac{W}{4} \frac{\sin \alpha}{\cos \alpha} = \frac{W}{4} \tan \alpha = \frac{W}{4}\mu$, where μ is the coefficient of friction for the metals in contact.

We might arrive at this result directly for a level road by multiplying $\frac{W}{4}$ by the coefficient of friction, as $\frac{W}{4}$ is the only force acting upon the axle before motion.

Let a = radius of axle in feet; let r = radius of wheel in feet: Then the work done in overcoming the friction on each axle for one revolution is $2\pi a \frac{W}{4}\mu$ in foot lbs., where, of course, $\pi = \frac{\text{circumference}}{\text{diameter}} = \frac{22}{7}$ nearly.

For four axles the work done is $2\pi a W\mu$. This work is done while the hutch is moving through a space $2\pi r$. Therefore the power required to overcome the friction in drawing the hutch is $\frac{2\pi a W\mu}{2\pi r} = \frac{aW\mu}{r}$. This power, obviously, from the result, varies directly as the diameter of the axle, directly as the weight of the hutch, directly as the coefficient of friction, and inversely as the diameter of the wheel. To reduce the retarding force of friction, therefore, for a given weight of hutch (1) the diameter of the axle should be reduced as much as possible; (2) the coefficient of friction should be made as small as possible; (3) the diameter of the wheel should be made as large as possible.

---

*Throughout this paper I find it easier in some cases to deal with a single wheel, and for simplicity I take the weight on each wheel as one-fourth of the whole, although this is only true for flat and straight roads. The total result for the hutch works out practically correct.

That the diameter of the axles may be made small the strongest material should be used, such as steel. Care must be taken not to reduce them so far as to interfere with the strength, or to make the bearings liable to cut, and, for this reason the bearings should be made long. The coefficient of friction depends on the materials in contact, on the construction of the journals, and on the care paid to the oiling or greasing. The coefficient could be largely reduced if axles were turned and pedestals bored, and if some better method of oiling was employed than is common. Here the question of first cost is important, and it is a nice calculation how much may be spent with advantage in improving the lubrication, always taking into consideration the roughness of the conditions under which hutches work. The diameter of the hutch wheel depends on the construction of the hutch and on the height of the working and roads.

It is worth while working out an example of this friction. Let diameter of axle $= 2a = 1\frac{3}{8}$ in.; let diameter of wheel $= 2r = 10$ in.; let $\mu = \cdot 1$ as a fair average; let W $= 14$ cwts. Then, taking our formula for the force of friction, $\frac{aW\mu}{r} = 21{\cdot}56$ lbs. or $\frac{1}{70}$ of the weight of the hutch.

This is a large force, and, as I have said, *theoretically* the friction from this source is the most serious we have to deal with, but in practice there is a more serious retarding force in the side friction between the wheels and rails, and between the wheels and the hutches, due to imperfections in construction and the dirt that will gather in spite of every care. This friction is different for different kinds of wheels.

It is hardly necessary to say that there are three forms of wheels in use: (1) edge wheels, to run on angle or box rails; (2) flange wheels, to run on edge rails; (3) double flange wheels, to run on edge rails. The third form may be left out of account, as wheels of this description are little, if at all, used underground, although they are used in some surface works.

In dealing with this friction I take as a basis for consideration the ordinary arrangement of wheels fixed on their axles. The side friction in the case of edge wheels is caused by the rubbing

of the side of the wheel against the flange of the rail, or against the dirt which gathers there, and by the rubbing of the side of the wheel against the dirt which may gather between the wheel and the tram or side of the hutch, and also in a less degree by the rubbing of the shoulder of the wheel against the pedestal. The worst form of wheel for producing this friction is the flat form commonly employed, such as shown in Fig. 3.

FIG 3.

It is obvious that if dirt lodges against the side of the hutch with such a wheel, rubbing goes on between the whole circumference of the wheel edge and the spokes as well, if the conditions are such that the wheel comes in contact with this dirt; and it is also obvious that where the wheel comes in contact with a perpendicular part of the angle rail or dirt lying there, the friction produced by the contact is very great. The rubbing with the sides of the hutch will not take place if the shoulders on the wheels are kept in their place by the pedestals, but in practice the pedestals are often of bad construction, and constantly going out of order.

Some alteration might be of advantage both in the form of the wheel and rail, and I give in Fig. 4 a sketch of a wheel which

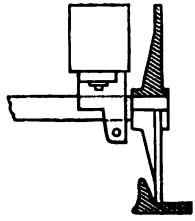

FIG. 4.

seems calculated to save friction. The wheel shown is a ribbed wheel, with the ribs inside. The ribs on the spokes would tend to rub off any dirt adhering to the tram or hutch, and, in any case, the friction would be with the ribs only and not with the whole face of the wheel, and these ribs would not be continuously in contact. By making the upright part of the

angle rail slightly inclined, not enough to cause any danger of the wheel mounting up the rail, the contact between rail and wheel would be reduced. There is the objection to such a wheel that it slightly increases the wheel gauge for the same size of hutch. Whether it is mechanically as strong as the ordinary form I can hardly say.

The great thing to prevent friction between rail and wheel is to lay the rails as straight and true as possible, but, notwithstanding every care, it will be found that the friction arising from this source is very great. With the slightest curve the tendency will be for the inside wheel to press against the rail.

Flange wheels are much less liable to this kind of friction than edge wheels. There is no room for dirt to lodge on the top of the rail, and, owing to the construction of the wheel, there is less surface to rub against any dirt which may be on the sides of the hutch, and therefore less chance of continual contact. There is also less chance of contact between flange and rail taking place, as, owing to the shape of the wheel, there is much greater likelihood of the wheels keeping to their proper place on the rails. The tread of the wheels is generally made slightly conical, the diameter increasing towards the flange, as in permanent railway waggons and carriages, and, in consequence, when one flange approaches near the rail, the diameter at the point of contact is greater than at the point of contact of the other wheel on the same axle, and more ground being covered in consequence, the wheels soon regain their correct position on the rails. With careful rail laying, friction due to side contact between flange wheels and rails will not be great.

Besides the sources of friction to which I have already referred which affect wheels both on straight roads and curves, there is friction which has special relation to the motion of the wheels round curves. This friction is of serious moment, as every one will have tested practically who set in motion the model of the Bent Colliery haulage shown at the Mining Exhibition, some years ago. The difference of force required to drive the model hutches along the straight rails was very markedly less than that required when they came to the curves. The reason is plain.

When two wheels of the same diameter fixed on a common

axle are going round a curve, the outside wheel has a longer distance to go than the inside wheel, and therefore the outside wheel must either slip over the difference in distance, or the inside wheel must slip in its place, revolving without covering the full distance. This is evident, as the one wheel cannot go more revolutions than the other, both wheels being fixed on the same axle. Suppose, for example, that there is a curve of which the radius of the inside rail is r and of the outside rail $r + a$, a being the gauge of the rails. Then the distances over which the two wheels have to travel are respectively $2\pi rn$ and $2\pi(r + a)n$, where n represents the proportion of the circumference of a circle represented by a curve.

The difference of the two distances is $2\pi(r + a)n - 2\pi rn = 2\pi an$, which is the distance over which one of the wheels must slip. Suppose, for example, that the curve is one quarter of a circle, or $n = \frac{1}{4}$, and the gauge $= a = 2$ feet. Then $2\pi an = \frac{2 \times 22 \times 2}{7 \times 4} = \frac{22}{7}$ feet.

It is evident from the fact that r is eliminated in making the calculation that the difference $2\pi an$ is independent of the size of the radius, and varies directly as the gauge. The smaller the gauge the less will be the slipping. Leaving out of account the side pressure of the wheels on the rails, the amount of power required to overcome this extra friction may be taken as the power required to pull one half of the weight of the hutch—only half, because only the wheels of one side slip—through the distance $2\pi an$ against the force of friction; or the work required $= 2\pi an \frac{W}{2} \mu$, where W = weight of the hutch, and μ = coefficient of friction. This is where the two rails are level.

For example, take $a = 2$ ft., $n = \frac{1}{4}$ circle, $w = 14$ cwts., $\mu = \cdot 17$. Then, the extra work done in taking the hutch round the curve is 418·88 foot lbs.

This result is not strictly accurate, as the friction is measured by the product of the co-efficient of friction into the pressure, and where the hutch is going round a curve this pressure is not exactly $\frac{W}{2}$ but is $\frac{W}{2}$ + or — as the case may be, the pressure due

to the centrifugal force. Take Fig. 5, and suppose that the

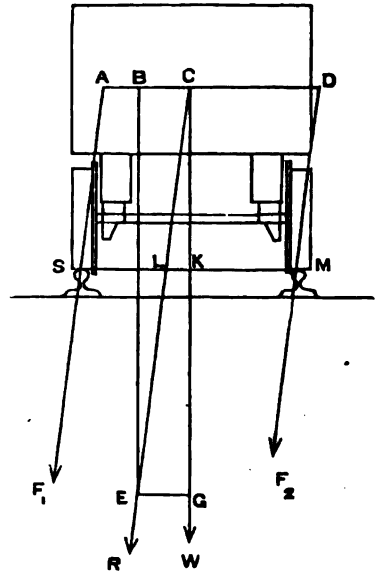

FIG. 5.

inside wheel is slipping. The force which acts at the centre of gravity of the hutch is R, which is the resultant of W and the centrifugal force which is measured by BC. This force may be resolved into four forces acting at the point of contact of the four wheels with the rails and parallel to CE.

Let h = height of centre of gravity from rails.
Let r = radius of curve.
Let a = gauge of the rails.
Let v = velocity of motion.
Let θ = angle ECG.
Let F_1 = forces parallel to CE on outside rails.
Let F_2 = forces parallel to CE on inside rails.
Let P_2 = vertical component of F_2 on rail, which is the pressure producing friction when the tread of the wheel is at right angles with the plane of the wheel, the horizontal component not exerting any pressure on the rail.

Then $F_1 \times AC = F_2 \times CD$.

and $F_1 + F_2 = R = \dfrac{W}{\cos\theta}$

$\therefore F_2 \dfrac{CD}{AC} + F_2 = \dfrac{W}{\cos\theta}$

$\therefore F_2 (CD + AC) = \dfrac{W\,AC}{\cos\theta}$, but $CD + AC = a$.

and $AC = SL = SK - LK = \dfrac{a}{2} - h \tan\theta$.

$$\therefore F_2 = W \frac{\left(\frac{a}{2} - h \tan\theta.\right)}{a \cos\theta.}$$

But $P_2 = F_2 \cos\theta \therefore P_2 = \dfrac{W}{2} - \dfrac{Wh \tan\theta}{a}$.

$$\text{But } \tan\theta = \frac{\text{Centrif. force}}{W} = \frac{\frac{Wv^2}{gr}}{W} = \frac{v^2}{gr}$$

$$\therefore P_2 = \frac{W}{2} - \frac{Whv^2}{agr}$$

Where the wheels are conical, P_2 must be multiplied to find the pressure by $\dfrac{\sqrt{t^2 + \frac{i^2}{4}}}{t}$, where t = horizontal width of the tread and i = difference between the extreme diameters of the wheels. I need hardly show how this is arrived at.

The extra work required on the curve therefore is

$2\pi an\left(\dfrac{W}{2} - \dfrac{Whv^2}{agr}\right)\mu\left(\dfrac{\sqrt{t^2 + \frac{i^2}{4}}}{t}\right)$. But $\dfrac{Whv^2}{agr}$ will be found to be a very small quantity, and hardly affects the result, and $\dfrac{\sqrt{t^2 + \frac{i^2}{4}}}{t}$ is very little more than 1; therefore $\dfrac{W}{2}\mu$ taken as the friction is very nearly accurate.

As the extra work done in taking the hutch round the curve is independent of the radius, it is obvious that no more extra work as regards this slipping will be required to take the hutch round a curve of very large radius than round the shorter distance for a smaller radius. The work, however, with

the larger radius is spread over a longer distance, and the time taken to travel is longer, and the percentage of extra work is less —or, in other words, while the total work done is the same over the curve, the power required at any time is less, the power being measured by the work divided by the length of the curve.

It is almost needless to say that in underground workings there are, of necessity, so many curves, that the question of diminishing the friction on hutches going round curves is of very great importance. Various expedients have been adopted to prevent the waste of power due to this friction, such as using wheels loose on axles, or one fixed and one loose for each axle, or a separate axle for each wheel. Theoretically each of these methods overcomes the difficulty, as, the wheels being free to turn independently, it does not matter how much difference in the lengths of the paths there may be. Wheels loose on the axles are pretty extensively used in many places, notably, I believe, in Wales, and in many parts of America. They are also used in some places in Scotland, but I cannot see a single example of them in the list of hutch drawings just issued by the Institute. [One has since been added—see Plate LV.] It seems the general opinion that the theoretical superiority over wheels fixed on the axles is more than counterbalanced by the extra cost of upkeep, although loose wheels may work satisfactorily where they are self-oiling, and where they are carefully constructed of good pattern. They are less suitable for spragging, and loose flange wheels will not have the same tendency to keep the proper position on the rails as fixed wheels. With wheels loose on the axles, a very low hutch might be designed for low roads and workings, with the body of the hutch low down between the wheels, and yet with wheels of large diameter. With such a hutch a narrow gauge could not be arranged, but this would not be so much required, as, with wheels loose on the axles, there is not the same necessity for a narrow gauge.

It is sometimes thought that, with flange wheels, the difficulty about the difference in length of the outside and inside rails of a curve may be overcome even with wheels fixed on axles, by making the wheels slightly conical, the diameter diminishing

towards the extremities of the axles. Reference has already been made to the effect that this has in keeping the hutches to the centre of a straight road. The reasoning for a curve is as follows :—As the hutch moves round the curve with a certain velocity, the centrifugal force presses the flange of the outside wheel against the outside rail, and the largest diameter of the tread of the wheel being on the outside rail and a smaller on the inside rail, if the proportion of the diameters is correct, the hutch may go round the curve without any of the wheels slipping. Supposing that the diameter of the part of the wheel on the inside rail is $2b$, then the wheel on going round the inside curve will turn $\frac{2\pi rn}{2\pi b} = \frac{rn}{b}$ times, where $2\pi rn$ = the length of the curve. Let $2x$ = diameter for the other part of the wheel that the wheels may go round the same number of times, and a = the gauge of the rails. Then $\frac{2\pi(r+a)n}{2\pi x} = \frac{rn}{b} \therefore x = \frac{(r+a)b.}{r}$ For example, let $b = 5''$ $r = 8'$, and $a = 2'$. Then $x = 6{\cdot}25$, or the diameter for the ontside wheel = 12½in., a difference of 2½in. between the smallest diameter and the greatest. If the radius is larger and the gauge smaller, the difference required will be less. With r = 20ft. and a = 18in., the difference required will be only ¾in. Curves of much over 8ft. cannot well be got in ordinary working places, and it appears plain, therefore, that it is not possible to have sufficient difference of diameter in the wheels to produce the desired effect, as 2½in. spoken of is an impossible difference. Such a construction may be of some advantage for large curves, such as curves on haulage roads, but some difficulty is found in taking advantage of the difference even when the conditions seem to be favourable. There will be little use of having the wheels conical, it is evident, if the part of the outside wheel with the largest diameter is not made to run on the outside rail. Some force is required for this. The effect is produced by so called centrifugal force. When the hutch is being pushed or pulled round the curve, it will, from the first law of motion, tend to move in the direction of the tangent of the curve, and the wheel will therefore press against the outside rail. This force outwards = $\frac{mv^2}{gr}$

where m = weight of hutch in pounds, v = velocity in feet per second, and r = radius of curve in feet, and g = force of gravity = 32. For example, suppose a hutch weighing 14 cwts. is moving at the rate of three miles per hour round a curve of 12ft. radius. Then $F = \frac{mv^2}{gr}$ = about 9lbs. This is a very small force, and may be readily counteracted by unevenness in the laying of the road. Suppose, for example, that the outside rail is higher than the inside, as shown in Fig. 6. Let the angle of

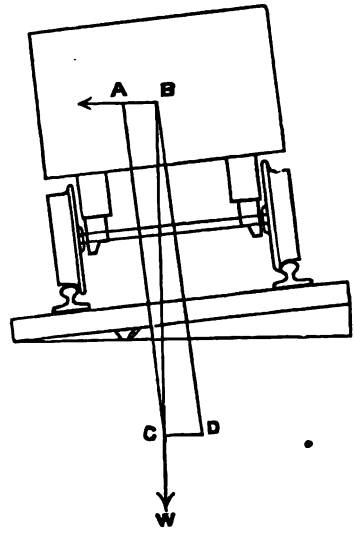

FIG. 6.

inclination be θ. Then W is resolved into two forces in the directions of BA and BD. Therefore the force along BA = F = W tan θ = approximately W sin θ, θ being a small angle. For example, let W = 14 cwts., and let 2in. be the height of the outside rail above the inside, the gauge being 2ft. Then $F = 14 \times 112 \times \frac{2}{24}$ = 130 lbs. This is very much greater than the force outwards due to centrifugal force. The rails, therefore, in a curve, should be laid flat. This is contrary to the arrangement

required for surface railways, where the speeds are high and the centrifugal force consequently also great. But there are other forces at work which oppose this centrifugal force.

In horse traction, the horse being in front of the hutch, and walking in the centre of the road, the pull is towards the inside of the curve, and the tendency is to press the flange of the inside wheel against the rail, and to bring the large diameter of the tread just where it is not wanted. Here the conical construction will be a positive disadvantage, and the slipping will be increased instead of being diminished.

In haulage roads, again, the bevel pulleys or rollers being placed some distance apart, the pull on the drawbar is not quite in the line of the curve, and, therefore, with anything like a rigid attachment between the hutch and the rope, the hutch will sometimes be pulled to the inside. To prevent this, the attachment should not be too rigid, and should be short. To insure the wheels being continuously kept towards the outside of the curve, the bevel pulleys should be placed with the rope bearing slightly further out than the middle of the gauge, in such a way that the rope may be never nearer the inside than the centre. There is an objection to this with some forms of haulage clips employed in Lanarkshire: the thimbles on these are apt to work loose when the clip is inclined against the bevel pulley. It will help the conical wheel to take effect if the road is so raised that the hutch, by the force of gravity, overruns the rope in going round the curve. In this case the pull is not so much felt, and the hutch inclines to press against the outside of the curve.

From these different considerations it is fairly obvious that it is rather hopeless to expect much saving of friction in curves from the use of conical wheels. The principal advantage of such a construction seems to be, as already stated, that it tends to keep the wheels in their proper place on the rails, and for this purpose it is sufficient to have them very slightly conical.

It must be noted that there is the disadvantage with such wheels that the force tending to spread the rails is increased.

This force outwards is, as shewn in Fig. 7, equal and opposite to BC, $\frac{W}{4}$ the weight on the rail for each wheel being resolved

into the two forces CB and CD. Let the force = F, then

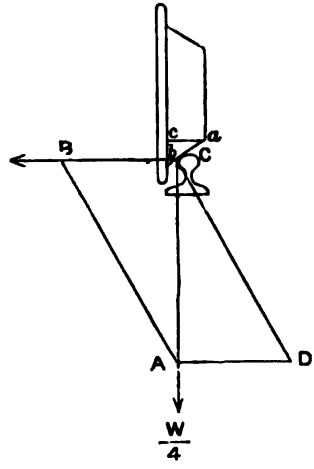

FIG. 7.

$F = \frac{W}{4}$ tan CAB, but the triangles CAB and *cab* are similar, and tan *cab* $= \frac{i}{2t}$, where i = difference between the extreme diameters of the wheel, and t = the horizontal width of tread. Therefore $F = \frac{W}{4} \times \frac{i}{2t}$. For example, let $i = \frac{1}{2}$in., and $t = 2$in., and W = 14 cwts. Then $F = \frac{14}{4} \times \frac{1}{4 \times 2} = \frac{7}{16}$ cwts., which is the force outwards for each wheel.

The difficulty in connection with the friction on curves just discussed is not the only one. There is another source of friction, and one for which there is practically no remedy, viz., the obliquity of the wheels to the rails. If we had a curve with the two wheels on a fixed axle corresponding with the radius of the curve, and the two wheels having their diameters nicely adjusted to the length of the rails of the curve, then as the axle revolved about the centre of the curve, the movement would be quite smooth. In a hutch, however, we have other conditions. The two axles are parallel, and neither is in a line with the radius of

the curve, and, as a consequence, the front wheels tend to press towards the outside, and the back wheels towards the inside of the curve. In Fig. 8, AE and KF represent the axles of a hutch,

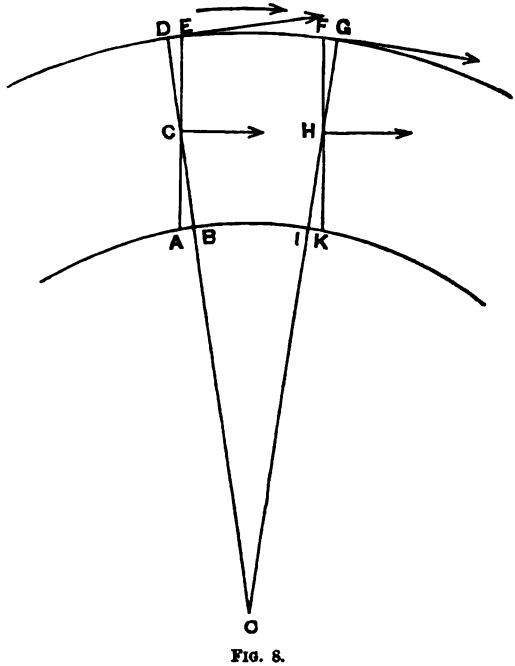

FIG. 8.

and the plane of the wheels being perpendicular to the axles, the back wheels tend to take a path inside the line of the outside curve, or inside the tangent of the outside curve, and the front wheels tend to take a path across the line of the outside curve, or across the tangent of the outside curve. This tendency results in a certain amount of slipping and twisting, the amount of which it would be difficult to estimate. With a considerable velocity, the centrifugal force will press the wheels against the outer rail, in spite of the natural tendency of the back wheels, and neutralise to some little extent the effect, but will not overcome it. It is plain that the obliquity is reduced as the axles are brought nearer together, and as the radius of the curve is increased, because the further C and H are from the centre, and the nearer C is to H,

the smaller will be the angles DCE and FHG. A little play-room is usually allowed between the wheels and the pedestals to make the motion easier.

From these investigations of the motions of wheels on curves, the following conclusions are evident, as necessary, if we wish to reduce friction as much as possible :—

(1.) The radius of the curves should be large.

(2.) The gauge of the rails or wheels should be narrow.

(3.) The axles should be near together.

The size of the radius of the curves is dependent upon the general arrangements below ground. The gauge depends on the construction of the hutch. In any case, it must not be made too narrow for a good-sized horse to walk freely between the rails. 2 ft. seems to be a good and workable, as it is a favourite gauge. The axles cannot be brought nearer than the size of the wheels will permit, and must not be brought so near as to interfere with the stability of the hutch. The distance necessary for stability will depend very much on the inclination of the workings. For a very flat working, they may be very near together, while for a steeper working a greater distance is required. Take, for example, a gradient of 1 in 3, with a hutch 18 in. deep inside, and the centre of the axles 7 in. below the bottom. If the hutch be filled water measure, the centre of gravity of the hutch will be, roughly, 10 in. below the top, and in a line between the two wheels. The centre of the axles will be 15 in. below this point, and the plumb line from the centre of gravity will pass 5 in. from the centre point between the circles, as shown in Fig. 9.

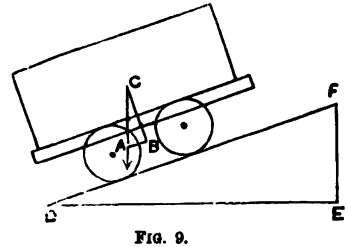

FIG. 9.

AB : BC :: FE : DE. Therefore AB : 15 :: 1 : 3.
Therefore AB = 5 in.

This allows the axles to go as near together as the wheels will allow, but a considerable margin is required when there is the possibility of the wheels being raised by passing over pieces of coal, &c. Probably, in such a case, 16 in. to 18 in. from axle to axle will be a safe distance. It is a great advantage to have the axles near together, both for the reasons advanced and because it makes a hutch very much more easily put on the rails again if it should slip off, a man being able to get a greater leverage to help his work.

Thus far I have treated hutch wheels as perfect cylinders—as perfectly circular—but unfortunately we find that, through wear due to spragging, &c., hutch wheels soon lose their perfectly circular shape, and have their circumferences worn into flat pieces. With edge wheels this is specially the case, as the edge is thin—about $\frac{1}{4}$ in. for steel rails—and the same edge always comes into contact with the rail. It is very doubtful to my mind if there is any special advantage in having so thin an edge. The only way to restore the shape of the wheels when worn is to hammer them out while hot, if they will stand it, or to turn them. The latter method leaves a true circular wheel, but the diameter is reduced. The former, even when carefully done, leaves a wheel of very indifferent shape. With flange wheels, the wear is not so great. The width of the tread being considerable (about 2 in.,) and the same part not always coming in contact with the rail, there is less liability to wear, and indeed the rail shows the wear more than the wheels.

With both kinds, however, there is more or less wear, and it is interesting to calculate what effect the flat pieces so formed have on the haulage of hutches. Practically, they add very seriously to the power required to drive them. Let Figs. 10 and 11 represent wheels with their edges worn, and let EC represent the flat piece of the wheels. As before, let weight of hutch = W. Then $\frac{W}{4}$ or one-fourth of the weight of the hutch, acts on each wheel. When the flat pieces are flat on the rail, the reaction is equal and opposite to the weight acting downwards, and in the same line, and the friction, however small, tends to make the wheel turn, the turning moment being $\mu\frac{W}{4} \times AF$, where μ

is the coefficient of friction. This changes whenever the flat piece ceases to coincide with the flat surface of the rail, for then there is a force tending to turn the wheel back again; and this force, a maximum when the wheel rises, decreases as it turns, until the point C is directly below A, when it ceases to act. It is plain that no turning will take place, or there will be equilibrium, when the moment about the centre of the force due to friction is equal to the moment of the force due to the reaction. That is, when (Fig. 10)

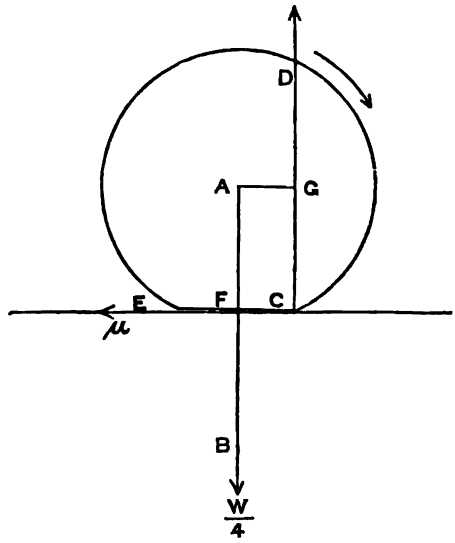

FIG. 10.

$\mu \frac{W}{4} \times AF = R \times AG$ (where R = reaction), or when $\mu AF = AG$, because $R = \frac{W}{4}$ very nearly. For steel upon steel μ may be taken as ·17, and there will be no turning of the wheel when $AG = \frac{17}{100} AF$, or when AG is more than one-sixth of AF. But AG FC = AF tan FAC (Fig. 11.) Therefore tan FAC = μ, or FAC = the angle of repose. From the table of natural tangents, we find that the angle FAC is 9° 40′. FC = AC sin FAC = 7 × ·17 = 1·19 for a 14 in. wheel; or, for a 14 in. wheel, no turning will take place when EC, the flat piece, is 2·38″. When the rails are dirty, μ is

greater than ·17, and a flat piece of greater than 2·38″ will be required to prevent turning. This is the reason why sand put on a rail will sometimes make a wheel turn when it is slipping. If the wheels are not turning, the power to draw the hutches is increased by $W \times \mu$, less the friction of the axles. This is a serious amount.

Suppose that the wheels are flat, but not so flat as to prevent them from turning. Take Fig. 11. $\frac{W}{4}$ acting through the

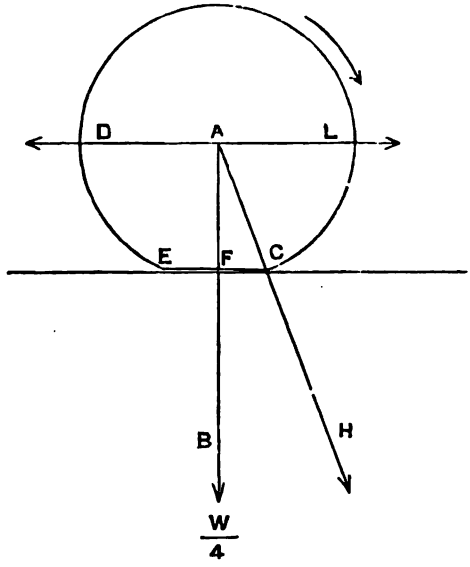

FIG. 11.

centre of the wheel may be resolved into a force acting along AD in the direction contrary to the moving direction and a force acting along AC, C being the extremity of the flat piece, and the wheel being just on the point of turning. The force along AD = $\frac{W}{4}$ tan FAC. This force decreases when the wheel is turning, until the point C is directly below A, when it is nothing. The force is also nothing when the wheel is turning, and E is directly below A, but as EC comes nearer to the rail, the force acts along AL, and gradually increases until EC coincides with the

rail. From this it is evident that there is a force, $\frac{W}{4}$ tan FAC, acting along the line DL, alternately opposing and increasing any force which is propelling the hutch. In hand-drawing with worn wheels, therefore, the work is intermittent. When the hutch is rising, owing to the flat piece, the force required to move the hutch is increased, and when it is falling, no force is required. The drawer cannot store the energy saved, and it is much harder for him to push by jerks than to use a constant smaller force. Practically, the same applies to drawing by horses. It does not quite apply with mechanical haulage in all cases, for, if we have a train of hutches, with a heavy strain on them, some will be rising when others are falling, and where power is lost, power is also gained—the hutches being coupled together—and in a haulage of this description, therefore, not much extra power is required as long as the wheels turn.

These calculations are made on the basis of the flat pieces of the wheels being quite flat, and therefore the results are only approximate, as the wheels are always, although worn, partly rounded. They serve, however, to illustrate the effect of wear on the wheels. Suppose that the part worn is $2\frac{1}{2}$ in. long, which, as we have seen in an example, will prevent turning, what proportion of the wheel will be worn off? $AF^2 = AC^2 - CF^2 = 7^2 - (1\frac{1}{4})^2 = \frac{759}{16}$. $\therefore AF = \frac{27}{4} = 6\frac{3}{4}$ in., and the radius of the wheel = 7 in., or the worn part is less than $\frac{1}{4}$ in. at the centre. It is from this evident that, when edge hutch wheels of 14 in. diameter become at any part worn anything like $\frac{1}{4}$ in., it is more than time to have them put right. This means that to reduce the diameter to 12 in., the wheels would require turning four times. An edge wheel can be made with a sufficient number of holes suitable for iron snibbles, to make turning unnecessary, as no piece can be worn so flat as to materially affect the traction of the hutch. It is probable that this is the best form of edge wheel when the workings are at all steep.

In making calculations for the power required for a haulage, it is of very great consequence to know approximately what to allow for the total friction on the hutches. Mr C. M. Percy, in his book, gives $\frac{1}{28}$ of the weight as a safe figure, and I think this will be near

enough for flange wheels; but for edge wheels, it will be something more. Any figure can only be an approximation at best, as is abundantly clear from the many varying causes of friction at work.

The more closely we investigate the different points in connection with the construction and upkeep of hutch wheels and axles, the more clearly do we see the importance of the subject, specially when we consider the very numerous journeys that must be made by the hutches between the working faces and the pithead. In large collieries where the distances are great, and the quantities to be conveyed very large, there are few things requiring more careful consideration than the hutches and their wheels. Too little attention is, as a rule, paid to them, although it is not now considered, as it once was, that any thing will do for a colliery tub.

The following paper on "Practical Application of Electricity to Mining Operations" was then read by Mr L. B. Atkinson:—

PRACTICAL APPLICATION OF ELECTRICITY TO MINING OPERATIONS.

By LLEWELYN B. ATKINSON, A.K.C., and CLAUDE W. ATKINSON, A.K.C., Assoc. M.M. Inst. C.E.

WITHIN the last two years the attention of mine owners and managers has been directed to the practical application of electricity as a means of transmitting power for underground work, and it is gradually becoming clear to them that in this method of transmitting power there exists a possibility of profitably working mines and collieries, which, from their great depth, or from the distance of the works from the pit shaft, are not commercially workable on any of the older systems of transmitting power. There is naturally considerable hesitation in taking up a new agent, and new methods of working, until those who were pioneering these new methods had clearly proved by the practical experience of every-day work (extending over considerable periods) that the results claimed were realisable under the existing circumstances. This hesitation is only to be expected, seeing the large sums of money that would be involved, and even possible risk of loss of life in the event of failure.

The authors of this paper, having now for some five years been constantly engaged upon the design, construction, and practical working of electric mining machinery, thought that some account of what they deem the important points to be studied and aimed at in this class of machinery, together with a description of some plants now working, will be of interest to the members of the Mining Institute of Scotland. In the early part of the present year the authors presented to the Institution of Civil Engineers a paper upon electric mining machinery, and in that paper they proceeded to demonstrate the following points:—

(a.) Electrical power is destined to become an important factor in mining mechanics, on account of—

1. The greater facility with which it can be used with machines which require to be moved from time to time as the work advances.
2. The great economy is first cost, and reduced cost of work-

ing, owing to its efficiency being higher than that of compressed air, or any other medium of power-transmission.

3. The smaller cost of maintaining the cables, as compared with piping, on shifting floors in roadways, &c.

(b.) That the methods described are sufficient to obviate all objections to the use of electric motors in coal mining, either by excluding inflammable gases, or by constructions which allow of their safe combustion.

(c.) That the experiments, trials, and practical work, extending over four years, show that—

1. Electrical pumps may be used with advantage and economy for mine-draining.
2. Electrical coal-cutters can replace hand labour, with saving in cost, and increased production of coal.
3. Electrical drilling machines are available in place of machines worked by hand or compressed air.

The authors do not, therefore, intend to again cover this ground, but rather to assume that the main questions there described are practically agreed to by most mining engineers; assuming that the practical construction of the machinery has arrived at a satisfactory stage, and to proceed to the description of such machinery, showing how the various objections which may be urged against electric machinery are met in the designs with which they have been associated. The objections urged against the application of electricity in mines may be shortly summed up as follows:—

1st. That there is a danger of fire, due either to sparking on the motor under-ground, or due to the breaking of the cables which convey the power to the motors.

2nd. That electric machinery is of a delicate nature, easily damaged and likely to get out of order, and that the use of electric motors necessitates the use of belts or ropes to drive the machinery which is being operated, and this point also renders the machinery unsuitable for damp, confined, and dirty positions.

These points, of great practical importance to those who have

charge of the machinery or of the collieries in which the machinery is proposed to be used, will be the special points to which this paper will be devoted.

At a very early stage of their experience with motors used underground, the authors came to the conclusion that although the risk of igniting fire-damp where it exists by the use of an electric motor was very much over-rated, nevertheless the objection to the use of an ordinary electric motor on this ground is a valid one, and, therefore, steps must be taken to meet the objection. They, therefore, designed the motor, which is now well known in the market as the "Goolden" enclosed mining motor, with a view of overcoming these objections. In this motor the whole of the revolving armature, including the commutator, and brushes are enclosed in a strong metal casing which can be opened for adjusting the machinery by the proper persons, whilst the volume of air or gas contained in the casing is kept as small as possible. Various difficulties, of course, arose in thus departing radically from the accepted principles of design of electric machinery, owing to the absence of ventilation for the revolving armature, and from other causes; but these difficulties were, after various experiments, satisfactorily overcome, and these motors have now been in use for some years, with most excellent results. In addition to enclosing the revolving armature, the magnet coils are also enclosed in metal cases. Contacts and terminals are also enclosed in metal covers, and the switches and resistances are placed in metal boxes, with air-tight or flame-proof covers, so that it is impossible for any part of the electrical circuit to be accidentally touched or short circuited by tools or otherwise, and the motors thus enclosed may with confidence be used in places where danger from fire-damp is anticipated.

An experiment was made by the authors as to the value of such casing in excluding inflammable gases from the armature, which is the point liable, if disarranged or damaged, to be a source of sparking. In this experiment one of these enclosed motors was placed in a large box filled with coal gas. The motor was, after having been five hours in this box, tested by drawing from the interior of the enclosed cover (by means of a small pipe) some of the interior atmosphere. This being tested by a eudiometer

showed no signs of being explosive, and a further test, using a "Pitkin" gas detector, showed that only 0·5 per cent. of gas had percolated into the casing in five hours. There would have had to be at least five times this amount of gas before any danger could be anticipated, even were the armature damaged. This experiment clearly shows that a motor of this kind would be absolutely safe for 25 hours in an atmosphere heavily charged with coal gas, a condition of things not likely to occur in practice, and one moreover which few safety lamps could be guaranteed to undergo, at any rate, in anything like a rapid current of air. This method of covering in the motors has, moreover, an additional value, that the motor is kept clean and dry, and this is a practical solution of the second objection that the electric motors cannot be subjected to such rough treatment as other machinery, and has a further advantage that the machinery can be placed in the hands of unskilled men or lads to manipulate without fear of shock or interference with the working parts. As an instance of the value of this system of enclosing motors, may be mentioned the fact that permission has been given by the authorities at the Home Office for their adoption at the mills of the "Smokeless Powder Co." for driving their machinery, notwithstanding the fact that their sanction was refused for the use of ordinary electric motors.

The next objection urged—that if the cables transmitting the power are damaged or broken, the possibility exists that a spark or burning arc will be formed which may fire the pit or cause an explosion—is principally urged in connection with collieries where great difficulties are found to exist in maintaining a roof along which the cables are usually carried.

The authors' practice has been, where the roof is good, to carry the cables on the roof on stoneware insulators, and if the roof is generally good, but subject to occasional falls, they have put the cable in india-rubber slings and when thus arranged should the roof fall, the cable is carried with it, the india-rubber sling giving way and allowing it to come down on either side of the fall. If the roof is one where difficulty habitually occurs, and fresh timber has to be constantly erected, it is better at once to place the cables, say, 6 inches underground, where they will be free from disturbance.

The authors have further devised a "Safety mining cable," which may be actually broken by falling timber or falling stone, or by tubs leaving the road along which the cable is placed, without causing a spark or burning arc at the point of fracture. The explanation and diagrams given herewith show how this result is arrived at.

In Fig. 1, A,A¹., are the two poles, say, of the generating

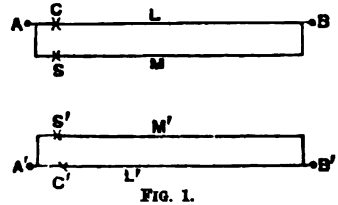

FIG. 1.

dynamo, and B.B¹. are the two poles of the motor or lamps. These are connected each by two wires, a main conductor, L.L¹., and a subsidiary conductor, M.M¹. These wires will, of course, carry current simply in proportion to the carrying capacity of each wire, and in circuit with each is a fuse C in the main conductor and S in the subsidiary conductor. Suppose the main conductor L be broken, provided that the subsidiary conductor M is not broken, no spark will result at breaking as the circuit is still closed, but the whole current now traverses the subsidiary conductor, and the fuse S at once melts. This fuse allows a weight to fall (see Fig. 2 where

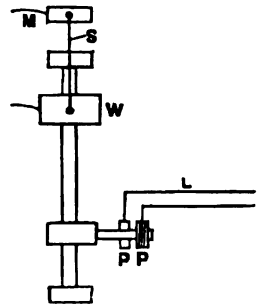

FIG. 2.

W. is the weight and P.P. the switch) and this instantly disconnects the whole circuit. This, then, is the principle.

The practical form of cable to carry this into effect is shown in Fig. 3. A close wound spiral of tinned copper wire, several wires

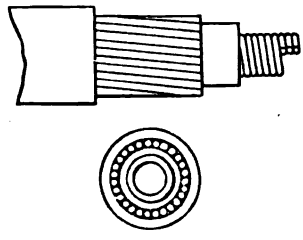

FIG, 3.

being for preference arranged in parallel, is braided over, but not heavily insulated. Over this is laid a stranded conductor of the required area, and this in turn properly insulated in any of the usual manners. If the cable is torn down from the roof or broken in any way in tension, this inner conductor extends to an indefinite extent, for as it gets drawn out the diameter of the spiral decreases and hence it becomes quite loose in its tube. This spiral conductor carries the current for an instant till the fuse breaks, when the whole conductor is disconnected from the supply.

Fig. 4 shows the cable thus broken and extended. It some-

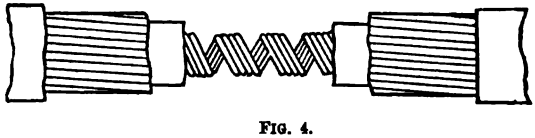

FIG. 4.

times however happens that a cable may be cut in two by a falling stone or even by a sharp instrument like a knife or axe. By a small addition to the arrangements already provided, this also leads to an instant disconnection of the circuit before it finally breaks, and hence without spark at the point of rupture.

Practical experiments with this cable easily demonstrate that the result arrived at is complete, and that the action by which the broken cable is disconnected at the dynamo is very prompt indeed, being practically instantaneous. As further bearing on this point on which great stress has been laid by parties

interested in opposing the introduction of electricity, the authors have been at some trouble to make inquiries at mines and collieries where electricity has been in use for some years, and have been so far unable to find any case where, with cables properly put up in the first instance, any danger whatever has resulted. It is, of course, unnecessary to add that, if inferiorly insulated cables are put up, without due regard to the conditions of underground work, danger may possibly arise; but this is no necessary part of the electric system, and would happen if almost any system were adopted.

Having so far dispensed with objection number one, the writers will pass to the second series of objections. It may be freely admitted that the experience of some of the earlier applications of electricity was far from re-assuring to those who had charge of them. The machinery broke down and needed frequent repairs and adjustment, and these defects led to the belief that they were inherent in the electric machinery. As a matter of fact, however, the difficulty that did arise, arose from imperfect mechanical construction, and not from any inherent difficulties in the electric transmission of power. As was naturally the case, the earlier machines were designed by electricians and others who had no knowledge of the requirements of mining work, and it was not until the authors had spent some years in studying collieries underground, and the working conditions required, that they were in a position to design electrical mining machinery suitable for the work. It may be interesting to mention that in certain machines, in which, in the first construction, shafts of, say, 1¾ inches diameter were used, shafts are now being used nearly 3 inches in diameter. This strengthening up of all the parts, and a construction of the revolving armatures in a manner which secures every wire in place by positive methods, instead of by binding wires and friction, has proved the remedy for many of these troubles, and they have now had both dynamos and motors running from one to four years in daily use without any repairs to the running parts, a result which few compressed air or steam engines are able to show. The electric motor, in fact, properly constructed for the work, has proved itself to be really a machine which

can be made to work longer than any other class of machine without repairs, and the reason of this is that owing to the motion being one of simple rotation it is easy to make every bearing dirt and dust proof, and the absence of reciprocation does away with all knocking, so frequently a cause of deterioration in all machines. These improvements in designs and mechanical construction have enabled these motors to be used with gear wheels upon their shafts, drifting direct on to the machinery to be worked. The reason for the adoption of ropes or belts has been to provide an elastic connecting medium between the armature and the machinery, which becomes unnecessary in a properly designed machine. As a practical example of the application of the principles here given, a series of diagrams have been prepared showing the designs which the authors are now adopting for dealing with the ordinary work in collieries. The most frequent applications of power underground are to electric pumps, and hauling machines (which may be either on the continuous system, or on the main and tail rope system, or single rope system for heavy dips). A diagram is also given of a portable hauling machine intended to do the work usually carried out by two horses. The writers do not propose in the present instance to enter at all on the question of coal cutting by electricity, which opens many entirely independent questions, which possibly they will be able to more satisfactorily deal with in a separate paper at some future date.

The usual type of pumping engine used by the authors is shown in plate LVI. It will be noticed that it consists of a three-throw single-acting ram pump, driven by one of the "Goolden" enclosed mining motors, mounted on the same bedplate.

The motor shown in the figure is capable of giving 40 brake horse power at a speed of about 550 revolutions per minute, and transmits power to the main crank shaft of the pump through two sets of double helical cast iron spur gearing. Special care has been taken in the design of these pumps to make every part extremely strong and substantial, and to provide ample bearing surfaces to all journals, so that long runs may be made with little attention or want of oiling. The rams are fitted with heavy guides so as to take any side thrust off the rams.

The authors have adopted the double helical teeth in the

gearing on these pumps (as also on their other machinery) as they find that by its use the wear is much reduced and the machinery runs more quietly and with less vibration.

Plate LVII. shows one of the continuous rope hauling engines designed by the authors. In this machine the rope is driven by a clip pulley, which is in turn driven by a "Goolden" enclosed mining motor through two sets of double helical gearing.

A clip pulley is adopted in preference to a coned drum, as the authors find that by this means the wear on the rope is very materially lessened, there being absolutely no slip of the rope, which being gripped all round is not flattened or cut by the pressure of the other turns of the rope. These engines are so strongly built that they can be started or stopped instantly with the full load on without any risk of damage. In fact a trial was recently made with one which was built for drawing coal up an incline of 9 inches per yard, the usual number of loaded tubs on the incline at any time being four. Eight loaded tubs were put on a part of the incline which was 16 inches per yard, and the motor started them instantly and brought them all up at the usual speed. Such a result would be impossible with belting or rope transmission from the motor to the pulley, as the belt would have been broken or thrown off; but with the strong gearing and motor the trial presented no great difficulties.

Plate LVIII. is a main and tail hauling engine of the authors' design. In general outline it resembles the machine just described, but the clip pulley is replaced by two drums. These drums are mounted to revolve loose on the main shaft, being bushed with gun-metal, a clutch being provided between the drums by means of which either drum can be driven at will. Powerful brakes are fitted to both drums, which, it will be noted, are actuated from the foot plate at the back of the machine by means of levers, as are the switches for starting and stopping the motor and also the lever for throwing the clutch in and out of gear.

Plates LIX. and LIXA. shew a single rope hauling engine for drawing tubs up a steep incline. The machine resembles that in Plate LVIII., but is only fitted with one drum, the tubs being allowed to run down the incline by their own weight, and checked as required by the brake.

Plate LX. shows a similar machine on a smaller scale, the whole being mounted on a short wheel base for moving it from place to place as required, the motor giving up to 10 or 15 h.p. This engine can be used for drawing coal up dips which are usually worked by horses, and by saving at least two horses a considerable economy in working will result from its adoption.

Plate LXI. shows a winding engine for drawing coal up a shaft. In this case the single drum, as in Plate LIX., is replaced by a double drum, and the clutch gear is replaced by a lever for reversing the direction of rotation of the motor, so that coal may as usual be drawn up each journey. It will be noticed that a powerful brake is provided.

The use of belts on an engine of this description would not only be attended with difficulty but also with danger. It is extremely difficult to make belts run properly on machinery where the direction of rotation is altered, but it will be readily understood that where the direction of rotation is suddenly reversed as in landing a cage at the surface, the risk of damage to the belting would be very great, and a breakage would probably lead to serious disaster, as all control over the drum would be lost.

It will be noted throughout all these designs that the following general principles have been adopted :—

1st. The use of the enclosed motor previously described.

2nd. The mounting of each machine on one bedplate and the connecting of the various parts by gears, making the machinery exceedingly compact.

3rd. The arrangements of levers, brakes, and starting and stopping gear, in the way usual with existing mining machinery, thus making the machines easily handled by men accustomed to handle steam or compressed air machines.

The following tables and particulars may be of interest as giving the electrical and mechanical results of tests carried out on a pumping plant which has been for some time in operation at the Allhallows Colliery at Mealsgate, near Carlisle, and a continuous rope hauling plant at work at the West Cannock Collieries at Hednesford in Staffordshire :—

TABLE I.

TESTS OF ELECTRIC PUMPING PLANT.

		Per Cent. of I.H.P.
Size of Cable, ...	19/16 S.W.G.	—
Distance from Engine to Pump, ...	1200 Yards.	—
Indicated H.P. of Engine, ...	31·75.	—
Loss in Engine and Belt, ...	10 H.P.	31·5.
Loss in Dynamo, ...	1·92 "	6·05.
Output of Dynamo, ...	19·8 "	62·5.
Loss in Cable, ...	1·7 "	5·36.
Power put into Motor, ...	18·1 "	57·14.
Output of Motor, ...	16·6 "	52·4.
Loss in Pump and Gearing,...	·1 "	3·15.
H.P. delivered by Pump, ...	15·6 "	49·2.
Gallons per minute, ...	118.	—
Pressure at Pump, lbs. per square inch, ...	190.	—
Efficiency of Transmission—		
or B.H.P. of Motor, 16·6.	—	76·5.
B.H.P. of Engine, 21·72, ...	—	—
Volts at Dynamo, ...	410.	—

Approximate cost, including engine, £1270, erected complete.

NOTE.—It is to be observed that the power lost in the engine is a very heavy proportion of the total, and reduces the net efficiency very considerably. This is due to the fact that the engine was running at less than half its proper load. As the pump is put further down the dip and the engine more fully loaded the efficiency will improve, from that of the engine increasing.

TABLE II.

TESTS OF CONTINUOUS HAULING ENGINE.

Size of Cable, ...	19/17 S.W.G.
Distance Engine to Hauling Engine—yards, ...	1400.
H.P. put into the Dynamo, ...	22.
Output of Dynamo,...	19·8.
Loss in Dynamo, ...	2·2.
Loss in Cables, ...	2·6.
H.P. put into Motor, ...	17·2.
Loss in Motor, ...	1·5.
H.P. expended in raising Coal and Tubs, ...	12·1.
H.P. expended in Friction moving Tubs, ...	1·3.
H.P. lost in Hauling Gear and Rope, ...	2·3.
Speed of Rope—feet per minute, ...	264.
Efficiency, $\frac{\text{B.H.P. of Motor}}{\text{H.P. put into Dynamo}} = \frac{15\cdot7}{22}$, ...	71·3%.

Approximate cost, including engine, £1320, erected complete.

NOTE.—These tests were made immediately after starting the machinery, while the road was but partly completed, and was being used as a single road only. Better results would be obtained after running a few weeks.

The following description of an extensive system of electrical power now being installed by Messrs W. T. Goolden & Co., Woodfield Works, Harrow Road, W., in conjunction with Messrs D. S. Bigge & Co., of Newcastle, at a colliery owned by the Earl of Durham, will probably be of interest. The plant is designed to perform the operation of pumping, hauling, and winding. The pit shaft is 230 yards in depth, and the cables are carried a distance of 1700 yards to a point where a continuous hauling machine is installed, capable of hauling 500 tons per day up an incline of 3 inches per yard, 1¼ miles long. The cables then proceed to a point further, where a pump is erected, designed to pump 150 gallons of water per minute on a head of 300 or 400 feet. Proceeding further, to a total distance of over 3000 yards, a winding engine is at work drawing coal up a vertical shaft from a lower seam. The whole of the cable used on this installation is of the safety mining type previously described, and suitable branch boxes are provided with air-tight lids, arranged so that they cannot be interfered with except by the authorised persons. The plant for generating the power on this installation consists of two dynamos, each of 100 H.P. nominal capacity, together with a similar dynamo, which is used for exciting or magnetising these dynamos, and for running lamps in the buildings and offices on the surface and underground. The engines adopted are "Willans'" enclosed high-speed engines, running at 350 revolutions per minute, and each engine indicating 140 H.P. with 90 lbs. steam pressure. There is, the authors are aware, a considerable prejudice in the minds of mining engineers against the use of high-speed engines, but the experience gained in running high-speed engines in electric lighting work leads the writers to suppose that a more extensive experience with them will lead to their extensive adoption. This prejudice probably arises from a mental comparison of a high-speed open double-acting engine with a similar engine running at a lower speed; but in these engines, which are single-acting only, with two cylinders, the

arrangements are such that all the brasses are in constant thrust, and being in addition carefully balanced, they run absolutely noiselessly.

The experience of those engineers who have within the last few years tried high-speed engines for colliery fans has been entirely in their favour.

It will be seen, from the descriptions of machinery and plant, that the aim of the writers in applying electricity to mining, has been to adopt as far as possible the results of experience gained with machinery driven by compressed air and otherwise, and to adapt the electric motor to these conditions, rather than to design new machinery to suit the supposed requirements of electric power; and they think that in adopting this procedure they may count upon the support of the many mechanical and mining engineers who are perfectly satisfied with pumping, hauling, and winding machinery as it exists, but who require a simple means of transmitting power to such machinery.

DISCUSSION.

The PRESIDENT, in inviting discussion, said the paper was by gentlemen who together had given much attention to the subject. It was a very important subject. There was no class of work where the transmission of power was of so much importance as in mining. He might say that in Scotland to a very large extent the objection as to gas did not exist. The mines were not so gaseous as in some parts of England and Wales. They had some fiery mines, but many were sufficiently free to make that objection of no account. He asked how the cost compared with compressed air.

Mr ATKINSON said in such a case they had to consider the basis of the comparison. People who had replaced compressed air or steam with electricity for pumping had told him they considered the saving would pay for the whole plant in two years.

Mr ARCHIBALD asked if there was any fixed rule for loss of

power between the dynamo and the motor at various distances. Assuming they placed the motor 500 yards from the dynamo, what would be the loss if placed 800 or 1000 yards?

Mr ATKINSON detailed an instance following on a pumping plant which he had put in where, as there was a tender for the work, the cables were cut pretty fine, and they allowed for 10 per cent. on each, the cost of cable being £300. By doubling this sum the loss was reduced to 5 per cent. If, however, they spent an indefinite sum there need be no loss, though in an ordinary case 10 per cent. was not excessive.

The PRESIDENT—Suppose you had a cable 500 yards long with a loss of 10 per cent., what result would you have at 1000 yards?

Mr ATKINSON—Exactly double. Replying to Mr ARCHIBALD, the speaker explained, as regards a probable extension, that it would be well to consider the ultimate point he would like to go in the first instance.

Mr ARCHIBALD asked if the 10 per cent. loss was entirely between the motor and the dynamo.

Mr ATKINSON said the loss was in the conveyance through the cables.

Mr WOOD asked if the cables were covered.

Mr ATKINSON said if in a damp place, the cables were covered with vulcanized india-rubber.

The discussion was adjourned.

Atkinson's paper on
CTRICITY TO MINING OPERATIONS."

ENGINE.

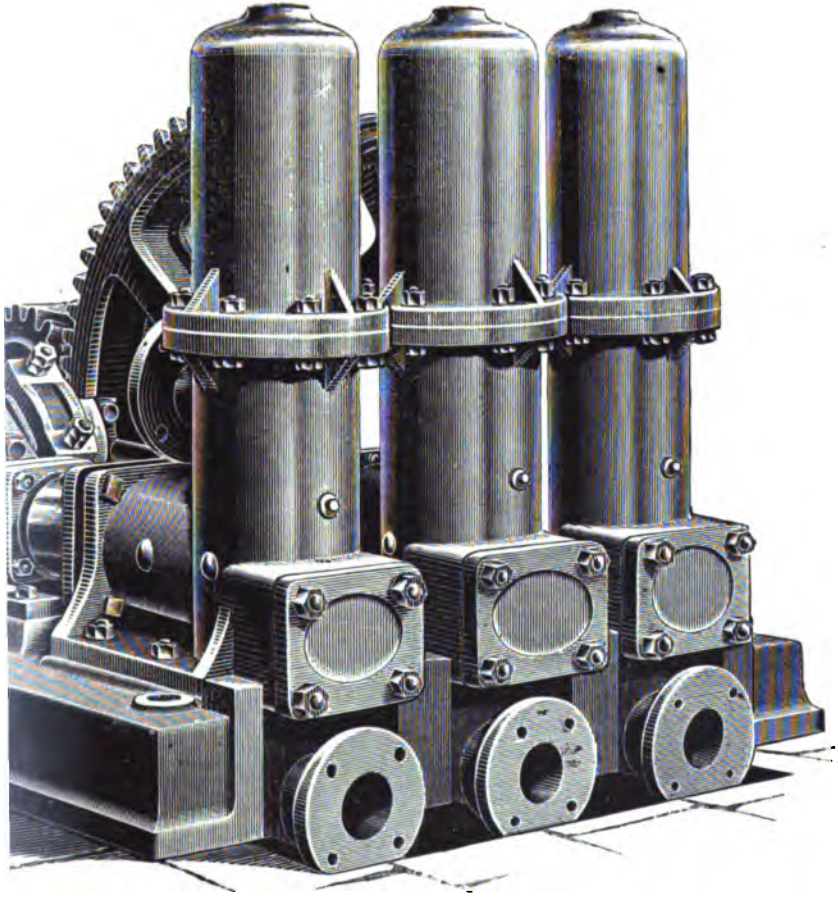

'Atkinson's paper on
CTRICITY TO MINING OPERATIONS."

: ENGINE.

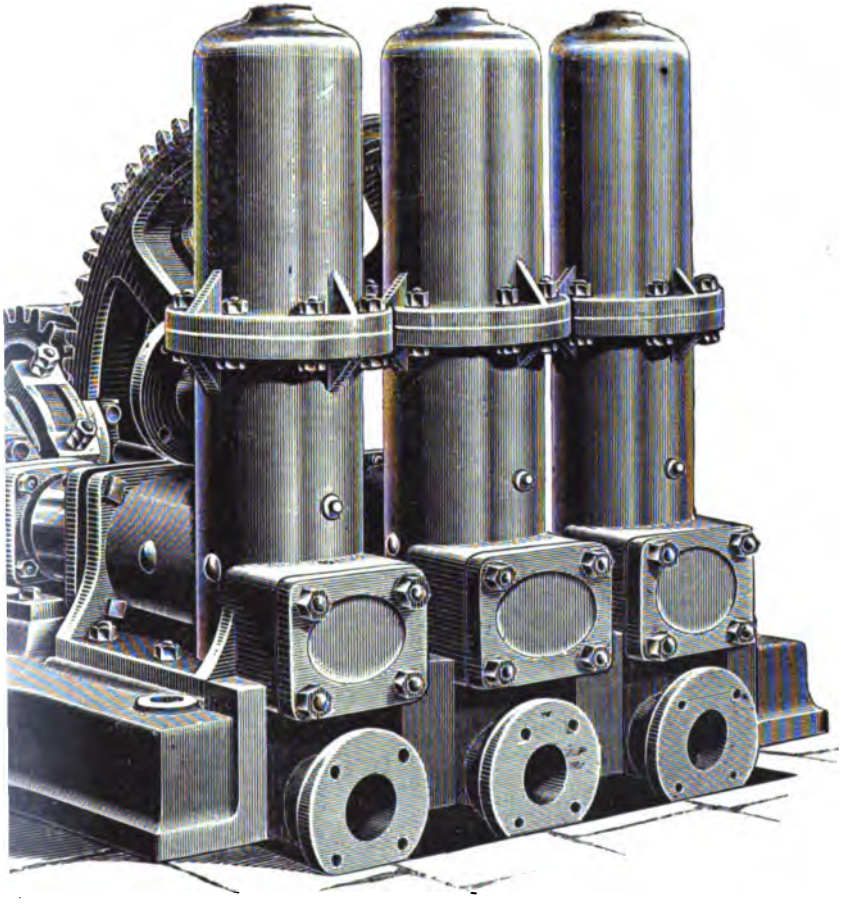

Atkinson's paper on
CTRICITY TO MINING OPERATIONS."

HAULING ENGINE.

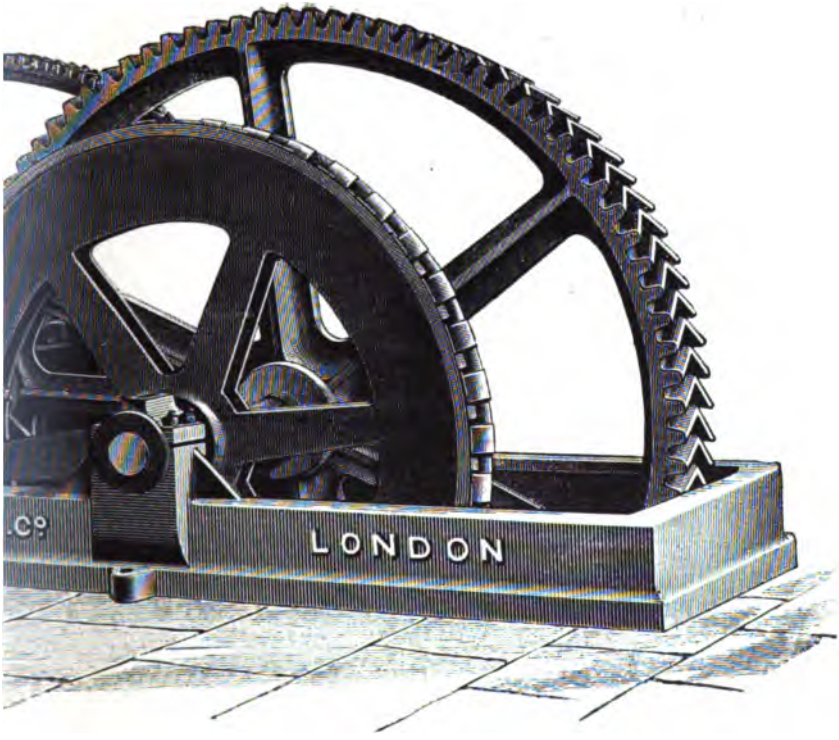

ner on
INING OPERATIONS

E.

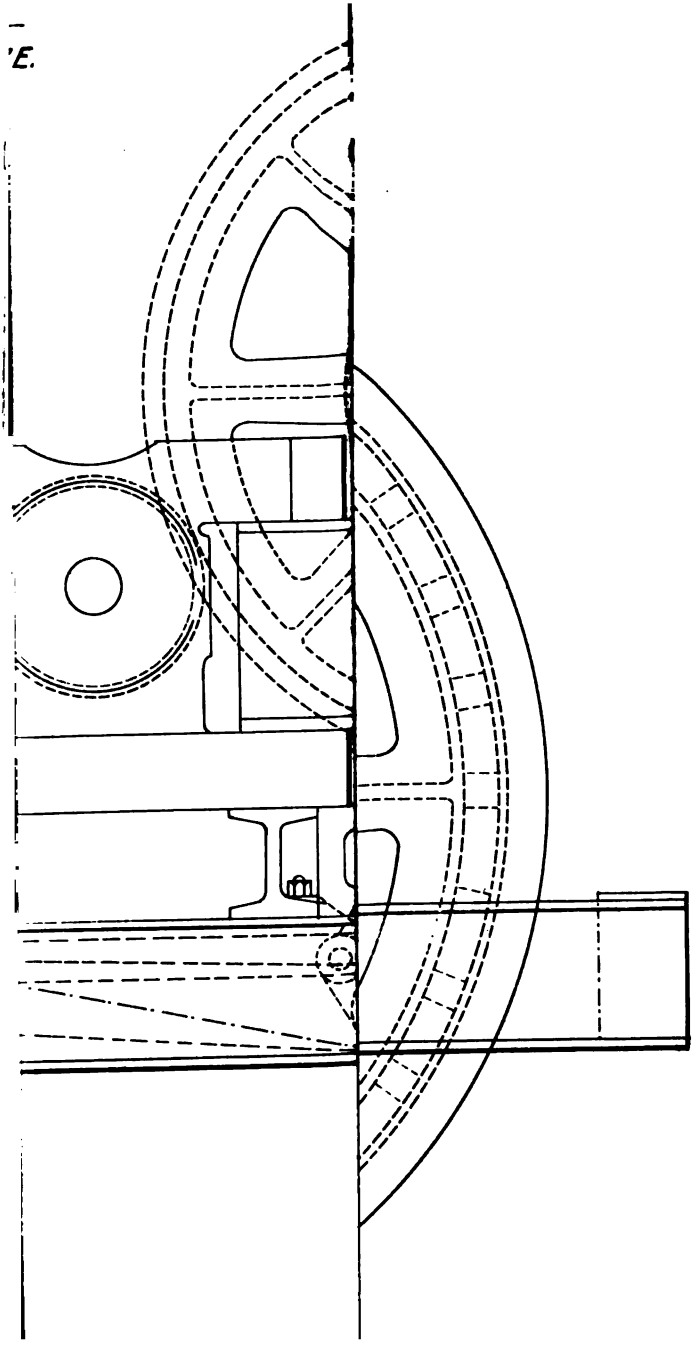

ustrate Messrs. Atkins
TION OF ELECTRICI
NGLE DRUM HAULI

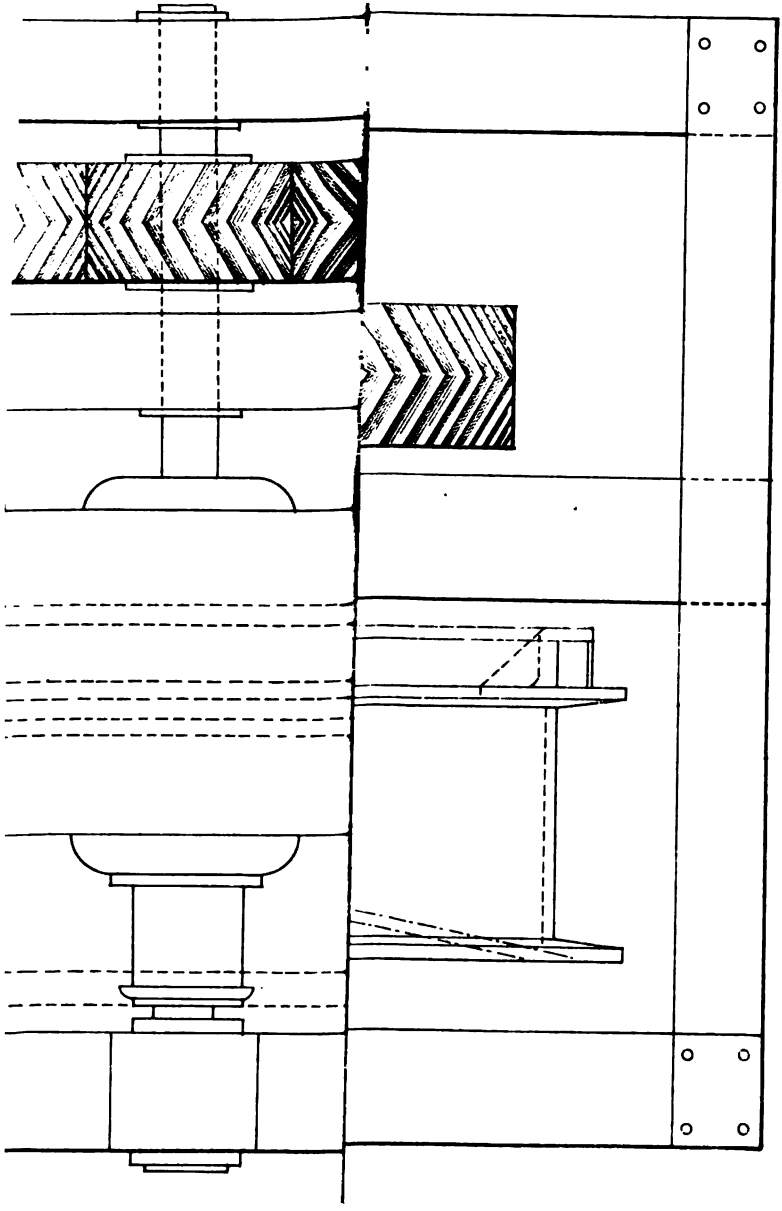

To illustra
PPLICATION

PORTAB

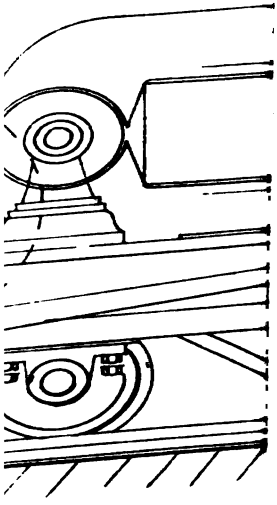

CALIFORNIA STATE
Mining Bureau.

THE MINING INSTITUTE OF SCOTLAND.

GENERAL MEETING,

HELD IN THE ROOMS OF THE

ROYAL SCOTTISH SOCIETY OF ARTS, EDINBURGH,

21st November, 1891.

J. B. ATKINSON, Esq., President, in the Chair.

In the absence of the Secretary, the minutes of the last General Meeting were read by the Chairman, and confirmed.

The following were elected by ballot as ordinary members :—

GEORGE MORRISON, Hareleeshill Cottage, Larkhall.
JOHN CHAMBERS, Haywood Colliery, Lanark.
ROBT. ROBERTSON, Jr., Sydney Mines, Cape Breton, Nova Scotia.
DANIEL MARTIN, Clydeside, Broomhouse.
DUGALD STEVENSON, Ellismuir, Baillieston.
THOS. LAIDLAW, Luggiebank, Bargeddie.
DAVID FLEMING, Merryton Colliery, Hamilton.
JAMES MURRAY, Merryton Colliery, Hamilton.
WALTER MUIR, Merryton Colliery, Hamilton.

The following discussions then took place :—

DISCUSSION OF MR MARTIN'S PAPER ON "COAL-CUTTING MACHINERY AT WESTBURN COLLIERY."

In reply to Mr Middleton, Mr MARTIN said :—I was not aware "he tried longwall by hand labour under the same conditions as those in which the machine was started in 1888." I was referring to longwall in Mr Forrester's time, when I understand it was given up as too costly. But taking his own figures, longwall by hand cost 2s 0½d per ton. (To get this from his figures, I am taking 30 per cent. as the dross output.) He paid 1s 7½d for the same work done by the machine, showing a respectable difference in favour of the machine of 5d per ton. If we assume that wages have risen 50 per cent. since 1888, the rate for longwall by hand would now be about 3s per ton. The actual cost by machine has to be increased about 40 per cent. to be equal to that figure. About "stowing the gum in the waste," there is no more necessity for doing this than for stowing dross in ordinary longwall. The gum at Westburn being pure coal, makes an excellent steam fuel, and we could never get enough of it for our boilers. I understand the sizes of cylinder and air piston are as he says—both are 22 inches. Not having had the covers off, I did not measure them, and took for granted statements made by others. The air enters the air compressor at the pressure of the atmosphere, and it is the momentum of the engine that makes it, with a steam pressure of 45, produce 60 and 70 lbs. air pressure.

There are two points in what Mr Archibald has said that require notice. On page 187, he says—"As it stood just now, the machine cost 2d to 3d per ton more than the work could be done by a good practical miner." This statement is rather confusing, and quite misleading. One who did not know would fancy that the machine had been stopped, and that he was getting the same work done by practical miners for less cost per ton. This is not the case. The "facts" in this comparison may be "indisputable," but they are quite irrelevant to the point, whether, under the very same conditions, hand labour or machine is cheaper. At Westburn, we worked a part of the field in the Ell seam with the machine, above the rib stone, which gave us a

working of 3 feet. We also worked the remainder of the field stoop-and-room, and stooping ordinary fashion, the whole height of the seam, which gave us a working 5 feet high. We found we could work the latter way cheaper. This discovery did not lead us to discard the machine. It made better coal, less dross, enabled us to employ men who were not good pickmen, and to train men as machinemen, who are still rather scarce, with a view of working another seam where there was no alternative. If Mr Archibald does work the 3ft. longwall cheaper by hand labour, then he will have made good his case against the machine. His other point is (page 187)—"The results were against the machine owing to the thickness of the seam," *i.e.*, if the seam were thinner, it would be the better for the machine. Quite the opposite is nearer the fact. All the work a machine does is the holing. Other things being equal, if a machine in a 2ft. seam cut 140 yards, the cost for machinemen will run say about 6½d per ton; in a 4ft. seam, the cost would be only 3¼d, because there is double the output.

Mr Rowan, in his communication, refers to a rough and ready way of finding out if a machine can be introduced to advantage in any seam, which is very near the mark, viz., if the output per man in ordinary working is under 2½ tons per day. The output from twenty-one men at Westburn was 90 tons daily, or 4 tons 6 cwts. per man. It may be done more exactly by considering the holing alone, which is all the machine does. Three men and a machine will hole say 140 yards, with a depth of holing of 30in. to 33in., in a shift. If five pickmen could do this in the same time, then it might be assumed that not much will be gained by introducing machinery.

Some interesting points have not been noticed. If those who have had an extended experience had come forward, we might have been able to compare the distance cut per shift with the machinery in use at different collieries, whether holing is done in daugh, fireclay, or rib stone, and what improvements are being effected in the hauling arrangement; the worm method in use, involving a great deal of friction where there is so much dust flying about, being a weak point in the Rigg & Meiklejohn machine.

The PRESIDENT moved a hearty vote of thanks to Mr Martin, which was agreed to, and the discussion of the paper was closed.

Mr ALEX. FAULDS communicated the following:—The approximate section of seam given in page 77 should be—

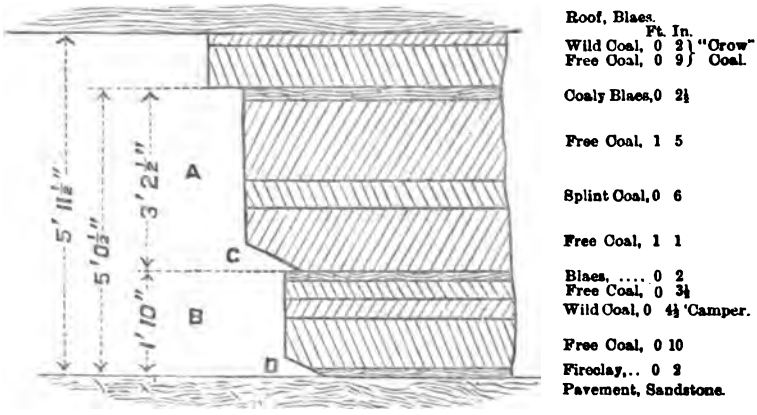

The crow coal is generally left on for a roof, but where good in the stoop and room working it is usually left on in the rooms, and afterwards taken out when stooping.

The portion or section *A* is worked longwall with the machine, and the portion or section *B* left in; but generally where worked stoop and room, the portions or sections *A* and *B* are taken out, and the camper and dirt left in the waste. The machine holes in coal *C*, and men in fireclay *D*. The following from actual practice was the expense for upkeep of similar machines to that in use at Westburn, but working in the Lower Drumgray seam, from 30th November, 1880, to 7th May, 1881, inclusive, viz., £43 1s 10d on about 10,000 tons, or very nearly 1d per ton.

The principal parts causing expense for upkeep were the driving wheels, steel cutters, worms, chains, disc, and jib.

A comparison of the costs referred to in the discussion is shewn on the following table :—

TABLE OF COSTS.

COST IN PENCE PER TON OF 20 CWTS. TRIPING WITH MACHINE.				
According to, ...	Mr Martin.	Mr Rowan.	Mr Middleton.	Mr Faulds.
Name of Seam, ...	Ell.	Splint.	Ell.	Lower Drumgray.
Thickness in Inches,...	36		36	32
Output in Tons per day,	90			82
Filling,.....	7·20	7·50	7·50	7·00
Drawing, ...	4 00	4·00	4·00	2·33
Brushing.....	3·20	3·50	4·00	3·50
Machining, ...	2·40	2·00	2·00	3·20
Cutting and Shearing at Wall Ends, ...	3·20	3·00	2·00	3·50
Smith Work, ...	1·00	1·00	1·00	031
Extra Brushing,.....				1·00
Two Enginemen for Compressors, ...				0·58
Furnishings, ...				0·96
Fuel for Driving, ...				2·02
Interest, ...				0·61
Depreciation, ...				0·92
Total, ...	21·00	21·00	20·50	25 93
Nominal wage per day,	6s.	4s.	4s.	5s.
COST IN PENCE PER TON OF 20 CWTS. TRIPING WITH HAND.				
Colliers, ...			70% @ 1s 9d 30% @ 4d	
Fathomage.....			12·325	
Brushing, ...			3·500	
			5 000	
Total, ...		30·00	20·825	36·00
In favour of Machine,		9 00	0·325	10 07
Nominal wage per day,		4s.	5s 3d.	

DISCUSSION OF MR MITCHELL'S PAPER ON "HUTCH WHEELS."

THIS discussion was adjourned.

DISCUSSION OF MESSRS ATKINSON'S PAPER ON "THE PRACTICAL APPLICATION OF ELECTRICITY TO MINING OPERATIONS."

THE PRESIDENT said the Secretary (Mr Barrowman), whose absence was due to illness, had had a letter from Mr L. B. Atkinson stating that it would be quite impossible for him to attend the present meeting. There was one question he (the President) wished to ask Mr Atkinson, viz., if he could tell him the usual speed or the number of revolutions per minute of the dynamos he employed in mining work? If anybody had any other question to ask, they would be taken down, and answered in writing. It was a very important subject, and he thought they should try to get all the information they could from the authors.

Mr ROBERT MARTIN said the authors of the paper showed a winding engine. He should like to know if it was in use.

The PRESIDENT said he thought there were gentlemen in the eastern part of Scotland who had got electrical machinery at work. If they could tell them how they were doing it would be interesting.

Mr MITCHELL, referring to p. 225 of the Transactions, said he presumed the reference there to the operation of a winding engine was an answer to Mr Martin's question.

Mr JAMES CLARK said he had an electric haulage locomotive bringing forward the coal to the pit bottom, and two pumps driven by electricity, and both were doing well. The one pump was driven by a fan engine which had plenty of spare power. The dynamo was coupled to the fan shaft by a driving band, and the current was carried overhead to the motor by wires erected on poles. The locomotive and the other pump were driven by a pair of 7-inch cylinders fitted up for the express purpose. Also,

the screens were lighted from a dynamo driven by another fan shaft, where more spare power was at command.

Mr ROBERT CLARK said he had not looked at the paper, and anything he could say was only what concerned himself. They had got a very small pump working by electricity. It was only some five inches diameter. It went 36 strokes, and lifted about 40 galls. per minute, 33 faths. perpendicular. He did not know the power of it, but so far as he could see he did not think there was much loss in diverting the power from the dynamo to the motor. The engine worked very easily, and, so far as they had gone, they were highly satisfied with it. There were other places in which they meant to put in heavier machines, but this would take some time.

Mr ROBERT M'LAREN said there was a pump at Hermand worked by electricity. About a year ago, shortly after the pump was introduced, he saw it, and was told that in comparing it with an ordinary pump there was a loss. It appeared, however, there was something wrong which had since been put right. It would, perhaps, be right to have the information placed before the Institute, because it was important to know if the machines spoken of by Mr Clark were more economical. The cost of upkeep of such pumps, he understood, was very high, and he should like to ask Messrs Clark if in their case it was greater than in an ordinary pump.

Mr JAMES CLARK said he started his small pump last January, and it had not yet cost a penny for repairs.

Mr ROBERT CLARK said, so far as they were concerned, they had nothing more to contend with than with an ordinary pump. In fact, he had two pumps doing similar work, one being driven by water pressure, and the other was driving off the pump rods of the pit; and he had nothing to keep up in the electric pump. It had gone for six months, and had been shifted only seven times, while the others were shifted once a fortnight. Otherwise there was nothing to keep up. A man attended to the pump, and the other pump received the same amount of attention.

The discussion of the paper was adjourned.

The following paper on "The Manufacture of Patent Fuel" was then read by Mr James Clark:—

THE MANUFACTURE OF PATENT FUEL.

By James Clark.

In consequence of the enormous increase in the output of coal during recent years, a proportionate increase has taken place in the amount of small coal brought to the surface. Where screening is carried on extensively, there is a great deal of very small coal made, and there are only two ways to dispose of this small, viz., either to coke it where the quality will suit for that purpose, or manufacture it into patent fuel. Until quite recently the various processes used have been regarded as trade secrets, and the works in most cases shut against strangers.

The first recorded attempt to introduce the manufacture of fuel into England was in the year 1594, and is described in a work by a lawyer named Sir Hugh Platt, entitled "A new, cheap, and delicate fire of cole balls." He describes his project as one to sweeten sea coal so as to make it a substitute for wood in domestic economy. He then describes how he made it by mixing loam in a tub of water and making it into a very fine pap and then mixing it with sea coal which had been previously bruised with a hammer.

The word patent was first applied to artificial coal in 1799, when the Marquis of Chambannes obtained protection for a suitable process, his object being first to prepare large from small coal by passing the latter through sieves made of wood or metal, and secondly consolidating the small coal by mixing it with earth, clay, cow dung, tar, pitch, broken glass, sulphur, sawdust, oil cake, wood, or any other combustible ingredient.

There are about 385 specifications relating to patents for inventions of artificial coal made from small coal between the years 1799 and 1885, some relating to the machinery employed and some relating to the process of manufacture.

Fuel making did not become an important production for steam generating until after many costly experiments had been made; and of all the materials tried, pitch remains the only one in regular use.

The methods of making fuel may be grouped under three heads :—

First.—Processes requiring drying in an oven after compression, such as the Farina process, which was thoroughly tried a few years ago and which completely failed.

Second.—What is called the dry process, which is still used to a certain extent, and which consists in passing coal and pitch through hot cylinders over a furnace.

Third.—The steam process, which effects the melting of the pitch by means of hot dry steam.

This last mentioned process is the one which is now almost universally adopted.

The coal owners on the Continent go in more largely for fuel making than we do ; and I am sorry I cannot describe some of their appliances, but probably some of the other members who have seen them may be able to furnish some particulars in the discussion of this paper. The home of the fuel trade in this country is South Wales, where from 60,000 to 70,000 tons per month are shipped abroad. Blocks of various sizes are made, and some of the works make what they call "ovoids" for shovelling into the furnaces ; they are egg-shaped.

The most modern complete factory erected in this country is that at Newport in Monmouthshire, where the whole arrangement for receiving the coal and converting it into fuel and shipping it into the holds of sea-going vessels is complete. At these works about 400 tons can be made per day.

Patent fuel possesses the advantage over coal of requiring less storage, as a ton of fuel occupies 31·5 cubic feet, as against 41 cubic feet for coal.

Its calorific power as against coal is slightly less when the coal is fresh worked, but fuel can be kept a long time, showing no depreciation after years of exposure, whereas coal would be valueless if kept a very short time.

Fuel up to the present time has been little used for domestic purposes, in consequence of a prejudice against the smell of the pitch. But this is gradually wearing away.

I will now describe a small plant erected at Ormiston Station Colliery two years ago by the Uskside Engineering and Rivet

Company (Ltd.). As shown on Plate LXII., A is a small pitch-mill fitted on the top of the hopper; B is a distributor for dividing the proper quantity of coal and pitch; C is a disintegrator for grinding and mixing the coal and pitch together; D is a pug-mill where the coal and pitch are stirred and heated to the proper consistency for compression. B^2 is a pan-mill to receive the coal and pitch, with revolving arms in it to fill the moulds; C^2 is the press cylinder for pressing the blocks; D^2 shows the amount of compression, 2½ inches on each block, which equals 12 cwts. pressure to the square inch of block surface. D^3 is where the block is tilted off after it is finished; E is a section of the stamper that presses the block; F is the lever on the end of the piston rod that lifts the stamper by means of what is called a hammer resting on the centre of this lever. When the moulds are filled the table is turned round horizontally, a tooth at a time, by a kicker on the upright shaft that passes through the pug-mill to the top of it; and they are passed round to the top of the hammer where the blocks are pressed. After they are pressed they are passed on with the stampers rising on an inclined plane, and when the moulds get to the opposite side of the press from the hammer, the blocks are above the level of the table and are tilted off there; then the stampers are passed along on a descending plane into the pan-mill for filling. Immediately above the pan-mill, and on the bottom of the pug-mill on this upright shaft, there is an eccentric that works the slide valve of the press cylinder and causes the piston to give the blow. The whole of this machinery is driven by a pair of coupled engines, 10-inch cylinders and 20-inch stroke, supplied with steam at 40lbs. pressure. The speed of the engine is 60 revolutions per minute; the speed of the main shaft of the full plant is 95 revolutions per minute. The pug-mill and press cylinder are supplied with steam at 70lbs. pressure from a small multitubular boiler, 7 feet long by 3 feet 6 inches in diameter, with 28 tubes of 3 inches internal diameter. It requires one man on the top to fill in the coal, one boy to fill in the pitch, one pressman on the bottom floor to attend to the press and pug-mill, two labourers to take away the blocks and load or store them, and one boy to fire the boilers; in all, four men and two boys. The

machine turns out 3 tons of fuel per hour. The quantity of pitch used is from 9 to 10 per cent. of finished fuel. This process is similar to Yeadon's; but we consider it is a much shorter cut, and the mode of pressure in this case is much safer, because, if the table does not come exactly to the very same place, the hammer gets a hold of the stamper all the same, and if anything were getting into the mould the hammer would simply put on the usual pressure and retire without doing any harm, which would not be the case if two hammers or plungers were applied as in Yeadon's; they would require to travel the full distance or break something. In our experience we find the principal things to attend to in making good fuel are to see that the proper quantity of pitch is filled in along with the coal; that they are both properly ground and mixed in the disintegrator; that the steam for the pug-mill is kept up to the proper pressure, and that the nozzles conveying the steam into the pug-mill are in order. We have two nozzles into the pug-mill; one about 12 inches from the bottom of the mill, and another about 6 inches further up on the opposite side of the mill. The diameter of these nozzles is from $\frac{3}{8}$in. to $\frac{1}{2}$in., screwed into a $\frac{3}{4}$in. tube. The height from the bottom floor to where the coal is filled into the hopper is 23 feet. The small coal, as it comes from the coal miners, is emptied by the pitheadman into a well made to receive it from the screening platform. The pitch is hoisted up an inclined plane in hutches to the same platform, and emptied on the opposite side of the hopper.

Before we erected this plant we stowed hundreds of tons of this gum in the workings; now it is all drawn, and whatever is left over after supplying the colliery with steam is made into patent fuel. Our coal is so soft and drossy that we entered into an arrangement with our coal miners when we first opened out the colliery to riddle all the coal over a $\frac{3}{8}$in. riddle, and that enabled us to make a better job of screening it into peas and nuts for the market.

The size of the briquette we make is 6 inches by 4 inches by $3\frac{1}{8}$ inches, and it weighs four pounds. We only make one size.

Stevenson Macadam, Esq., Ph.D., &c., Lecturer on Chemistry, Edinburgh, says in his analysis of the fuel that the patent fuel

CALIFORNIA
UNIVERSITY LIBRARY

manufactured by the Ormiston Coal Company proves that it excellent quality for general combustion purposes. It is made, burns freely and evolves a good heat. The fuel first-class quality for household purposes.

DISCUSSION.

Mr CADELL asked if there were no means of disposing of coking dross in the shape of briquettes by heating it sli till it began to cake, and then breaking it up, as pitch adde the expense. If they had a lot of good caking dross, and to raise the temperature slightly, it might be thus possib solidify it sufficiently to make it into good fuel without dri off all the hydro-carbon it contained. Had any of the ex ments been made in this direction?

The PRESIDENT said he expected their coal would not coke

Mr CLARK said that was the reason. Even if they had a g coking coal, he did not think it would make a good briqu A good freely-burning coal made the best briquettes.

Mr CAREY asked if it was proved that pitch was the product for making briquettes. He thought the weak p was the smoke from the pitch.

Mr CLARK said there was a prejudice against the pitch, but t did not hear any complaints now. All fuel makers, both on Continent and in South Wales, had had to fall back on the pit

Mr MITCHELL said Mr Clark had used from 9 to 10 per ce of pitch. He understood Evans did it with from 5 to 6 per ce

Mr CLARK did not think good briquettes could be made wit to 6 per cent. of pitch.

Mr CAREY said he fancied the briquettes were too large the air getting through them. He understood that by putti two holes through them air got into the centre. This, believed, was an improvement that should be generally adopte

Mr CLARK, tabling a specimen resembling a large-sized e said it should answer the description asked for.

Mr MITCHELL— Are these yours?

Mr CLARK—No, but I can easily make them. These are called "ovoids," and are manufactured in South Wales. It is as easy to make these as briquettes.

Mr M'LAREN said there was one place he knew where the briquettes broke down and became spoiled after being made.

Mr CLARK said he had not had experience of that. He had had them in his place for eight or nine months, and they were as good as when laid down. No doubt, if a proper percentage of pitch was not put in, and the briquette not made properly, it would break down, but if properly made it would stand.

Mr MITCHELL asked the effect of hot weather on the briquettes, and what the result would be if shipped to a hot country.

Mr CLARK said he did not know, but the sun in this country did them no harm.

The PRESIDENT asked how much one machine would make.

Mr CLARK said 3 tons per hour, 30 briquettes per minute, and 4 lbs. per briquette.

The PRESIDENT asked if they washed the coal before they used it.

Mr CLARK answered in the negative. He said they put the dross through a $\frac{3}{8}$-inch riddle before it left the pit. They had fired their boilers with nothing else for seven years.

Mr M'LAREN said it would enhance the value of the paper if Mr Clark gave a section of the seam.

Mr CLARK said he would require to give a section of four seams, but he could give the whole thing at next meeting.

The discussion was adjourned.

The following paper on "A Visit to the Coal, Oil, and Anthracite Districts of Pennsylvania" was then read by Mr H. M. Cadell:—

A VISIT TO THE COAL, OIL, AND ANTHRACITE DISTRICTS OF PENNSYLVANIA, AUGUST 1891.

By HENRY M. CADELL of Grange, B.Sc., F.R.S.E.

INTRODUCTION.

THE mineral resources of Pennsylvania already form the subject of an extensive mass of literature, and the reports of the geological surveys of that great State of the Union alone fill several shelves in our geological and mining libraries. In the midst of so much writing, however, it is a difficult matter sometimes to get at the small quantity of truth that is wanted to give us such a general idea of the subject as can be easily retained by the memory. The great deposits of bituminous coal, anthracite, and petroleum, as well as the wonderful natural gas wells of America, have been well-known to us by hearsay for years; but few, perhaps, have had the opportunity either of visiting the home of these most important natural products, or of obtaining a concise account of their nature and distribution. Last August, while on my way to attend the International Geological Congress, which was held at Washington, I was able to spend a week exploring the mineral resources of Pennsylvania, and as I saw much that was interesting and instructive, a brief account of my observations may be of interest to the members of the Mining Institute of Scotland. As I was able to visit and study, so far as time permitted, places where coal, oil, gas, and anthracite are all extensively "operated," I may venture to hope that my observations, although necessarily cursory, will enable members to form a rough general idea of the way these carboniferous products are developed.

After arriving at New York, I went to Washington, where my friend, Major J. W. Powell, the director of the great U. S. Geological Survey, kindly supplied me with valuable letters of introduction to some of the largest colliery owners and "oil men" in Pennsylvania. Being thus equipped, I was enabled to see in a comparatively short time what might otherwise have cost much more time and trouble to investigate. Wherever I went, I was received with true American hospitality, and nothing that I wished to see was withheld—indeed, I saw and learned a great deal more than I either expected or asked for. I may here stop to say that this national characteristic, more than any other, per-

haps, impressed itself on me and on the other European members of the Geological Congress during the whole of our Western wanderings, which covered some 8000 miles, and included a trip to the Rocky Mountains and back.

THE APPALACHIAN BASIN.

Before coming to details, it may be of interest to take a general view of the distribution and characteristic features of the vast Carboniferous formation of Pennsylvania. The Appalachian Basin, as it is called, contains the largest coalfield of any known Carboniferous area. On the map it rudely resembles a canoe, lying in a N.E. and S.W. direction, and extends from the north of Pennsylvania south-westwards through West Virginia, South-eastern Ohio, Eastern Kentucky, and Central Tennessee, to Western Alabama, a total distance of 900 miles from its northern extremity. The general structure of the field is that of a great trough, the strata in which are nearly flat in its western parts, but begin to undulate towards the east, where they finally become bent into the great anticlinal and synclinal folds of the Allegheny Mountains.*

The Carboniferous System of this part of America is very variable in thickness, and it would be difficult to give anything but the most general vertical section to indicate its chief divisions. Generally speaking, it may be divided into :—

Upper Barren Coal Measures or Permo-Carboniferous, thickness unknown, as top not seen, - - say	1000 ft.
Upper Productive Coal Measures, extending from the Wanesburg sandstone and coal down to the Pittsburg seam, its most important coal bed, thickness variable, - - - - - - - - - - say	450 ft.
Lower Barren Measures, shales and sandstones, - say	500 ft.
Lower Productive Coal Measures, extending downwards from the Upper Freeport coal seam to the pebbly sandstones and Brookville coal bed, thickness say	400 ft.
Pottsville Conglomerate Measures, including beds of shale, oil-bearing sandstone, and conglomerate, thickness very variable, - - - - - - say Mauch Chunk Red Shale and Mountain Limestone series, with oil-bearing conglomerate, - - -	400 ft.
Pocono Sandstone, shales and oil-bearing sands, forming base of Carboniferous system, - - - - -	450 ft.
Giving a total thickness of Carboniferous rocks of say	3200 ft.

* See "Stratigraphy of the Bituminous Coalfield of Pennsylvania, Ohio, and W. Virginia," by Prof. Israel C. White. Bulletin, U.S. Geol. Survey, No. 65, 1891.

Although no coal is found below the Carboniferous series of rocks, the economic hydrocarbons are not confined to this formation, but extend far down into the underlying Devonian system, whose upper 2000 feet contain many valuable oil- and gas-bearing sandstones.

THE STANDARD COLLIERY.

On reaching Pittsburg, the chief centre of the bituminous coal, oil, and gas region, I first visited the Standard Colliery, situated at Mount Pleasant, about thirty-five miles south-east of that city. This great colliery is the largest in America, and belongs to the H. C. Frick Coke Company, who own no less than 10,000 of the 16,000 coke ovens in the Connellsville coke district. The Standard property comprises 4,500 acres of land, under which the celebrated Pittsburg seam exists; and of this area only 400 acres have been worked out, so that the colliery has a long life to look forward to.

On my way to Mount Pleasant the train narrowly escaped a bad accident, from a heavy truck with some eighteen tons of stone, which had been carelessly allowed to run down a siding from a quarry to the main line just as we were passing the switches. The engineer, seeing the danger, jumped off the locomotive, and, landing on his head, was so much injured that he died soon after. Fortunately the engine was struck and not the cars, otherwise half the passengers might have shared the driver's fate. This showed me that careless people are to be found in the great Republic as well as at home.

Mr Robert Ramsay, the manager of the Standard Colliery, is, I was glad to find, a native of Fife, and my letter of introduction was not needed to gain for me a cordial reception by a "brither Scot" from the old country. I was pleased to find wherever I went, especially in the Pittsburg district, that our countrymen are as much respected as they are numerous. They seem always to get on well, and gain good and responsible posts, as they are generally steady, intelligent, and energetic, and never remain long in the lower ranks of labour, however small their means may originally have been. Scottish "bosses" or managers are the rule,

as, among other qualities, they seem to have the happy knack of making other men work hard—a quality which, it need hardly be said, is duly valued by the 'cute Yankee.

The Pittsburg or Connellsville seam has here a workable thickness of 7 to 8 feet. It is entirely used for coking purposes, and is very soft and easily worked. The colliery has two shafts and a "slope" or mine, by which the coal is raised. One shaft is a downcast, and is entirely used for ventilation. It is fitted with a 25-feet Guibal fan, which is directly worked by a 20-inch dia. by 36-inch engine, running at 50 revolutions per minute. Most of the coal is drawn up by the other shaft, which is 303 feet deep from the surface of the ground, the total height of the hoist from the bottom to the rail on the bank being 334½ feet.

The arrangements on the bank are very complete, and skilfully designed for a large output by Mr Ramsay, who got his main ideas from some of the large Scottish collieries, and introduced several important improvements of his own. The usual output in the nine hours' working day is 2000 tons of 2000 lbs., but once, to test the capacity of the arrangements for raising and handling the coal, no less than 3021 tons were hoisted in 8½ hours from this one pit.

The coal, as I have said, is very soft and easily worked, so that each miner can produce a good darg. The seam is worked on the double entry pillar and room system, and, as the field is very regular and free from the "troubles" and faults with which we are so well acquainted, and the dip very slight, there is no difficulty in having a very complete and regularly laid out system of underground workings.

The face men, who are mostly foreigners, are paid 1s per ton, and they have no difficulty in putting out eight or nine tons a day, so that they can make an average wage of 8s or 9s—not much different from that of our own miners here at present. I made a good many inquiries as to the relative financial position of American and Scottish miners, both here and in the anthracite districts, of which I shall speak afterwards, and I came to the conclusion that, taking the cost of living into account, the workmen in the old country are just now much better off than their contemporaries "across the water." The Pennsylvanian miner

works nine hours a day and six days a week, buys his coals at market price, and lives, according to the custom of the country, in a three or four-roomed wooden cottage, for which he pays from £11 to £22 per annum. Indeed, I met a workman at Pittsburg (who had escaped from Russia, and had been waiting for sixteen years till the expected revolution should allow him to return), who told me he had a house with three small rooms for which he paid £36 per annum, and could not keep his small family under £3 12s a week. Of course, there is no physical necessity for an American miner occupying a larger house than a Scottish collier, but in such a case the custom of a country becomes a necessity that must be satisfied. Again, the price of food in America is not much different from that which prevails here, but the style of living is generally more expensive, as the Americans are high livers and like plenty of delicacies. Protection has raised the price of manufactured goods, and hence clothing generally costs at least double its price here, while the quality is often inferior. Taking all the circumstances of the case into consideration, I do not think that any miner from the old country, working eight hours a day and eleven days a fortnight, and making say 8s a day, would better his condition by going to America, where, for 12s a day, he would require to work far harder and longer for his money, and would be obliged to spend it freely on the necessities of life, and on the expenses and luxuries that the laws of society in the West render necessary to respectable existence.

The Standard Colliery employs below ground altogether about 535 men and boys. Among them there are many foreigners from the south of Europe, such as Austrians, Poles, Hungarians, and Italians; wild, rough characters, with little intelligence and less morals, a class feared and detested by the true American, who sees in them an element of danger and instability to the great Republic. In the beginning of this year (1891) there was a great strike against a reduction in wages, which lasted three months. While it was in progress, a mob over 1000 strong on one occasion prepared for a general raid on the colliery. They began by tearing up the railways and cutting the telephone wires, and then marched in a body to the offices and colliery buildings, which are of wood, intending to set them on fire, and make a general wreck

To illustrate Mr. H. M. Cadell's paper.

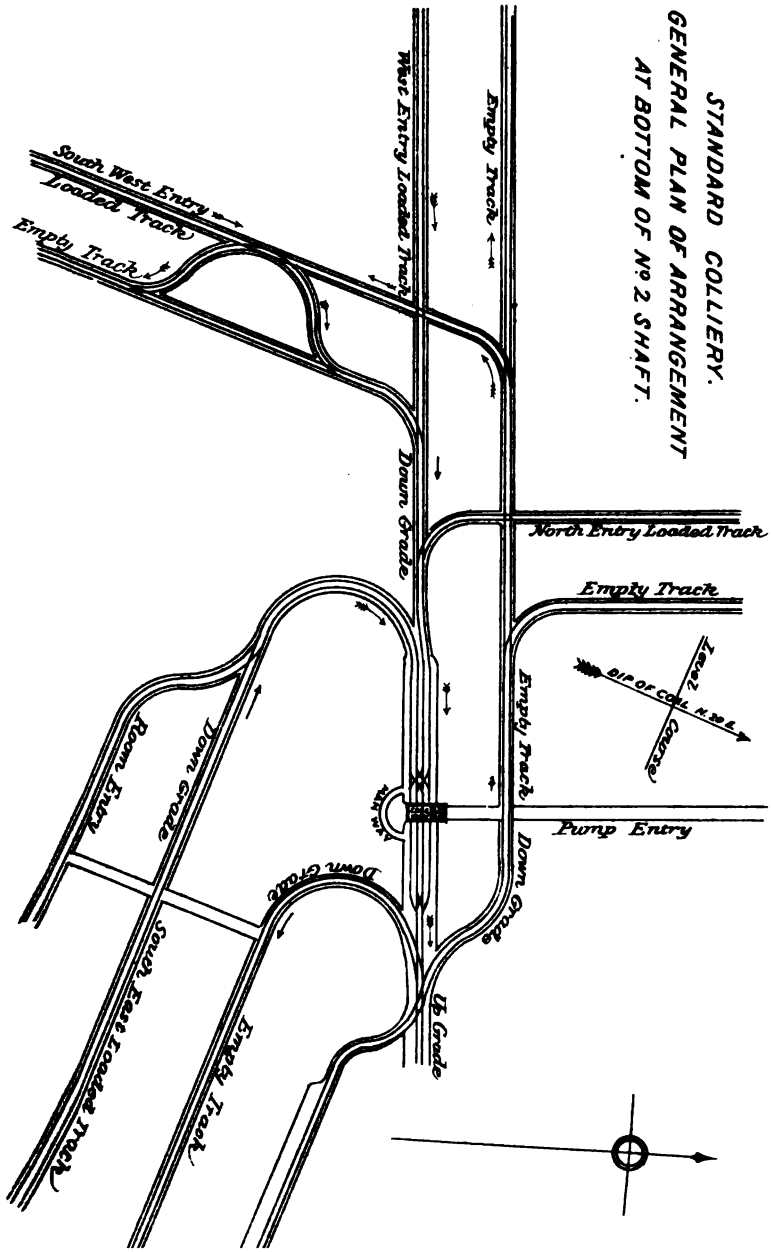

of the property. Having mostly served in the army before they emigrated, they were accustomed to drill and the use of weapons which, although illegal, they carry about, and use too, even in times of peace, as the law is not strong enough to enforce its enactments. On this occasion Mr Ramsay saw it was time to act, so he got together his party, numbering forty or fifty, and after arming them with Winchester rifles, waited for the attack, and threatened to shoot if the mob did not retire. Firing began on both sides, with the result that eight of the mob were killed and twenty wounded, while Ramsay's party got off with a bullet through one man's hat. Next day the military appeared, and the most prominent strikers were arrested, after which the disturbances ceased. I have mentioned this incident to show how disputes are sometimes settled, and what sort of wild life is still to be found in the mining districts of America.

The coal is hauled from the face to the pit bottom by horses and mules, and, instead of hutches, wagons holding 2½ tons are employed. The loaded wagons from the different parts of the workings, on nearing the bottom, run down by their own weight to the shaft, and the empties run off from the cage on the opposite side, so that the minimum of labour is required in handling them. The shaft, clear of timbering, measures 10 by 24 feet. There are two hoisting ways, each 7 by 10 feet, and the remainder with a cross section of some 90 sq. feet, is used as an upcast airway, and contains the steam pipes for the larger pumps. A manway, 3 feet wide, passes round the foot of the pit in a semi-circular direction, and no one under any circumstances is allowed to cross straight through the bottom of the shaft. A general plan of the pit bottom arrangement is given in Plate LXIII.

The pumping plant below ground consists of two Yough mine pumps, with 26 in. dia. by 48 in. steam cylinders, and 14 in. dia. by 48 in. water cylinders, having a capacity of 1200 gallons per minute. Besides these there are several smaller pumps for local dips, some of which are driven by compressed air.

The cages, which are very simple and strong in design, are fitted with safety catches, which are regularly tested once a fortnight by slacking the winding rope suddenly from the drum.

Perhaps the most interesting and ingenious device in the colliery is that at the bank for taking off and tipping the full wagons and putting the empties on the cage, a general sketch of which is given in Plate LXIV. On reaching the bank the full wagon is pushed off the cage by an empty one, which in turn is moved by the piston rod of a steam ram, worked by an operator at *X*, who turns on the steam by means of a lever attached to a rod with a handle at *p*. The loaded wagon then gravitates down to the "tipple," situated about 8 yards from the shaft, the descent being 4 inches. After being emptied into a hopper below, from which the coal goes direct to the ovens, the wagon is returned by a second operator at the tipple along another set of rails which run past the side of the shaft with a descent of 8 inches further, and is landed just opposite the side for empties going on to the cage, but one foot lower. The part of the track on which the wagon now rests is really a travelling carriage, called the "transfer truck," which moves at right angles to the direction of the rails, and at the same time travels up an incline so as to bring the empty wagon exactly opposite its place on the cage. The transfer trucks, of which there are two, one for each line of rails, are worked by a second steam ram, and the movements of all the wagons, loaded and empty, are under the control of one man who rules supreme at the pithead, and has only one assistant to help in disposing of the great output. By another arrangement, not shown on the figure, it is impossible for the operator at *X* to work the ram except when the cage is at the top and ready to receive a wagon. After reaching the hopper or bin below the tipple, the coal is dropped into "larries," or iron hopper charging trucks, each having a capacity of seven tons. The trucks are drawn away by light locomotives and emptied direct into the ovens, which are of the bee hive pattern and hold each 100 bushels. The average yield of coke per oven each week is 10½ tons, and 905 ovens are supplied from this one shaft. No attempt is made to utilise the heat or gas, and at night the whole region with its long terraces of blazing ovens has a very striking and weird appearance. The accompanying illustrations are taken from the description of the colliery which appeared in the *American Manufacturer*, June 19, 1891.

To illustrate Mr. H.M. Cadell's paper.

No 2 SHAFT. STANDARD COLLIERY.
ARRANGEMENTS AT BANK.

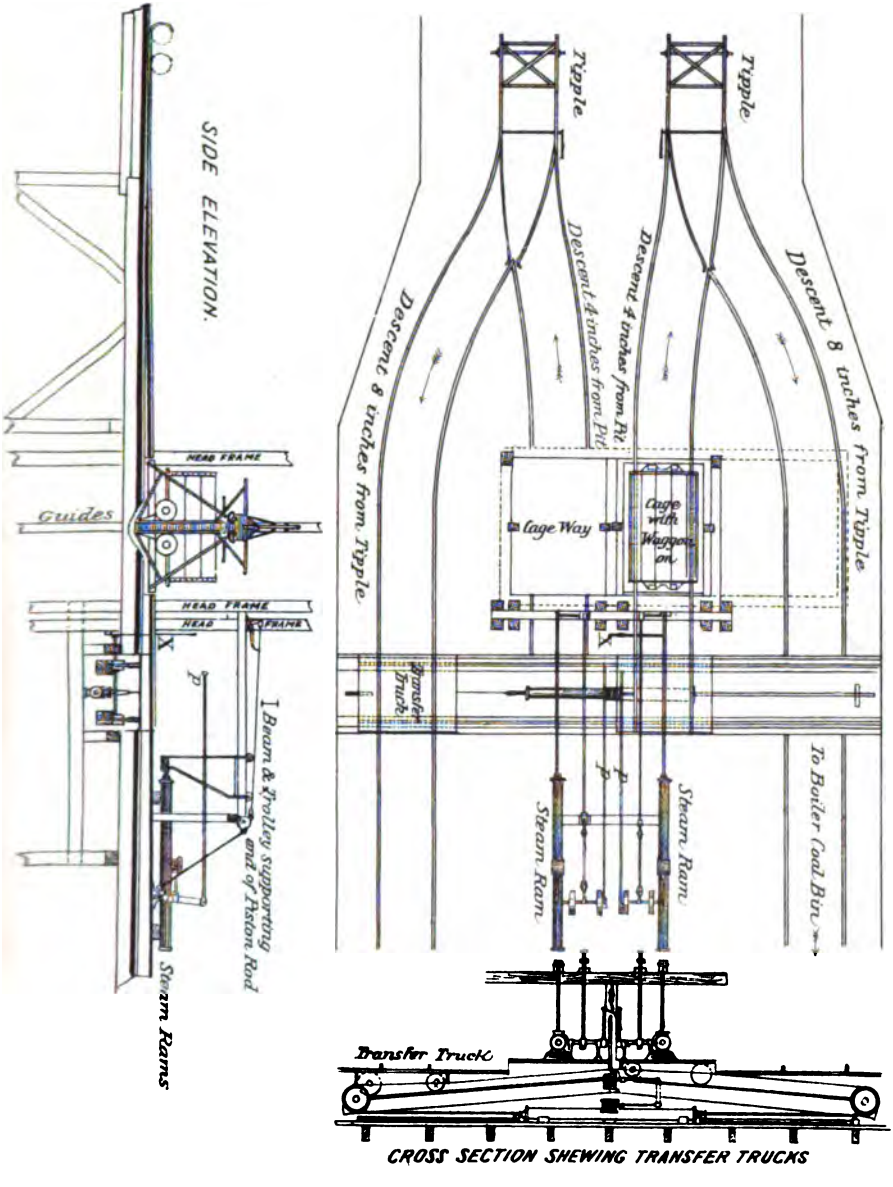

Oil Wells.

Next day I made my way to the Forest Oil Coy.'s office in Pittsburg, where Mr Young, the vice-president, kindly sent me out with a party of three others to see some new wells belonging to the Company. We took train to Oakdale Station in North Fayette Township, Allegheny County, about 12 miles W.S.W. of Pittsburg, where oil has been recently discovered in large quantities. As the Company's well is a few miles from the station, we got a buggy and drove through the country to visit it. The road, like most American country roads, was execrable, and every few minutes I expected to be pitched out when we jolted over an unusually large stone or into a particularly deep hole. At one place the road ran right along the stony bed of a river, along the sides of which some of the wells are situated. The water was covered with a film of oil, and had we dropped a light into it the results might have been disastrous. As we got into the oil belt, where the productive wells are situated, the tall lattice work "derricks" began to appear over the trees and along the sides and bottom of the glen. All the boring is done by means of a heavy tool on the end of a manilla rope. This is lifted and dropped by a primitive-looking wooden rocking beam worked by a crank, which in turn is attached to a shaft with a large wooden pulley, over which passes a belt worked by a small steam engine going at a good speed. There is generally a considerable quantity of gas, even if there is no oil in the rocks to be pierced, and a pipe in the borehole conveys the gas to the grate of the steam boiler, placed perhaps 20 or 30 yards away so as to avoid the dire consequences of setting the well on fire. There is thus no need of coal, as the well supplies its own fuel.

It is of course necessary to have the bore tightly tubed, as the gas and oil come up at enormous pressures, 400 to 500 lbs. per square inch being quite common. In order to allow of boring to be done after the oil has begun to flow, an ingenious device has been adopted. The tube at the mouth of the well is fitted with a horizontal branch to carry off the oil or gas, while the rope passes straight down through a stuffing box fitted into the cap, which is secured to the vertical prolongation of the tube.

As a manilla rope is rough, and could not be made to work tightly through a stuffing box, the rubbing part is surrounded tightly with a short length of smooth tube, which works up and down in the stuffing-box like the piston rod of a steam engine, and thus prevents the oil escaping by the wrong outlet. As the bore deepens this tube is shifted further up the rope, which is thus preserved from friction at the orifice of the pipe. The oil, and the gas which always accompanies it, are conveyed to a wooden tank made with staves and hoops like a vat, on the top of which are two square wooden ventilating pipes, through which the gas escapes into the air.

When we reached the Wright Well, where the oil had recently been got at a depth of some 1800 feet, the boring operations were still in progress. We were, however, fortunate in seeing the cap taken off and the tool hauled up. As the massive rod and tool at the bottom of the rope emerged, the pressure of the oil was so great that it lifted the rod right out of the hole and shot it a few feet into the air, and the orifice being thus clear, the oil spouted upwards in a solid jet 100 feet in height. Had any of our industrious Scottish oilworks' men, who earn their hard won profits by laboriously distilling petroleum and its products from the heart of the rock, been witnesses of this wonderful spectacle they might well have fallen down to worship. The sight is one I, at least, shall not soon forget. I was told that the well was yielding 500 barrels a day, and that for the following 30 days 300 to 500 barrels might be still expected. At the end of 90 days a yield of 150 barrels daily was all that could be hoped for, and in 6 months this would probably decline to 100 barrels, while for the next 4 or 5 years only from 5 to 25 barrels a day were to be looked for, after which the well would have no commercial value.

On the average, the life of a productive oil well is said to be from 5 to 8 years. The cost of drilling is one dollar or 4s per foot, and a good borer can drill a hole 6 or 8 inches in diameter at the rate of from 50 to 60 or even 100 feet in 24 hours. Of course it is plain that in such cases the rock is very soft and easily pierced. The discovery of oil greatly enhances the value of land, as about one-eighth of the production goes as royalty to the owner of the

ground. There is in the old country a great outcry in certain quarters against the royalties paid by mineral tenants to the proprietors of mineral estates. In America, the land of free popular institutions, the minerals go along with the land, and there is no talk of abolishing royalties to private owners, and making them national property. In Colorado the lessees pay from 15 to 40 per cent. of the net profits of the mines after smelting the ore, as royalty to the owners, and the State makes no claim in the matter.

After seeing a spouting well, which is by no means a common sight for a casual visitor, my curiosity was satisfied, as I had no expectation of seeing anything "bigger" that day at least. Before returning to Pittsburg, we drove to MacDonald, a small town a few miles off, where oil had been found quite lately. Like many other American townships, it is an ugly collection of two-storey wooden houses with small gardens, and broad belts of ground running at right angles to one another that pass for streets, but have not yet been constructed with the help of any other tools than the theodolite at first and the cart wheel afterwards. The so-called streets are straight in plan but like a saw in section. The whole place was covered with a forest of derricks, and everyone seemed to have begun drilling in his garden, however small it might be. The sludge from the bores was being emptied out in such volumes that at one place where an unusually deep ditch ran across the street it had become filled with the gray mud to such an extent that we could not venture across for fear of being swallowed, horses, buggy, and all. There were in the town about 120 wells in course of drilling, and the engines were all driven by steam raised by the natural gas, which occurs in great abundance here and is used for lighting the town at night. Like other good gifts it is recklessly wasted, and we passed several jets blazing at noon, as it does not pay to have the gas stored against the fast approaching evil day.

Another interesting feature in the development of the great oil industry is the immense system of pipe lines that convey the oil from the productive wells to the market, perhaps several hundred miles away. The pipes are of malleable iron with screwed joints, and lie on the surface of the

open ground or along the roadsides. At one place I counted six pipes from 3 to 6 inches in diameter, all running along the same track one on the top of another. As the ground is hilly the oil cannot gravitate the whole distance to the central market. There are therefore convenient pumping stations placed at intervals along the track, where it is forced onwards by specially constructed pumps or rams driven by steam and natural gas.

The subject of the geological nature, distribution, and mode of occurrence of oil and gas is one of great interest and importance, and a short consideration of the matter may not be without its value here.

As I have already mentioned, these substances occur chiefly in the lower part of the Carboniferous, and the upper part of the Devonian formation, which lies below, and occupies the same place as the Old Red Sandstone of Scotland. This is to us interesting, as the Scottish oil shales are also chiefly found among the Lower Carboniferous rocks under the Mountain Limestone and the lowest productive coal measures. Our Lower Carboniferous rocks below the Hurlet or Mountain Limestone were, however, chiefly deposited in fresh or brackish water, while the American oil-bearing rocks are chiefly marine deposits as is proved by the salt water which is found in many of the strata.

Oil and gas—in this case, marsh gas or light carburetted hydrogen—are secondary products, due to the slow distillation of vegetable and mineral matter embedded in the strata, which have found their way into the most open rocks in their vicinity, where they have accumulated in large quantities. It is clear that, if a quantity of salt water, oil, and gas be mixed together in a bottle, the brine, being heaviest, will sink to the bottom, and the oil will float on its surface, while the gas will accumulate in the neck. After long experience, it has been found that the occurrence of oil and gas is generally regulated on these principles, and that their distribution is not absolutely uncertain and without a law. It is true that a dry hole is often found beside a productive well, but it is also true that, outside of certain belts, there is no chance of getting oil at all. The oil and gas occur in certain coarse open sandstones, in the interstices of which there is space for fluid matters to accumulate. Now, if we suppose an oil-bearing

To illustrate Mr. H. M. Cadell's paper.

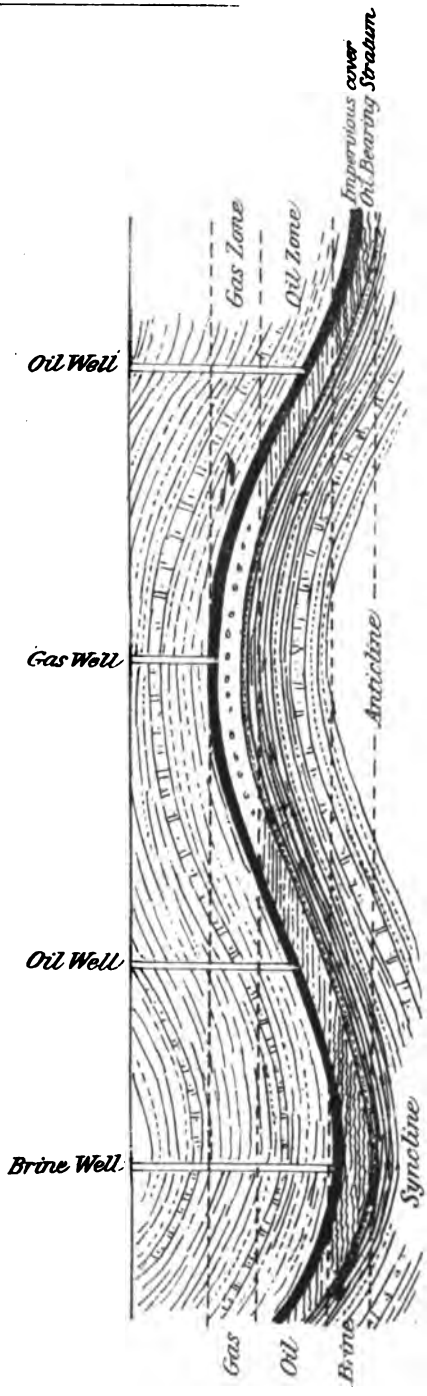

SKETCH SECTION ILLUSTRATING RELATIVE MODES OF OCCURRENCE OF OIL & GAS.

stratum to be bent into an anticlinal arch and a synclinal trough, in course of time the gas will rise through the oil, and collect at the top of the arch, where it will remain, provided the overlying bed be impervious. The oil will be found below the gas, and any brine that may originally have been mixed with the oil will sink to the bottom of the basin. This is what has actually been proved to occur over large areas. The strata where the best wells are found lie in long, low anticlinal and synclinal folds, and, generally speaking, the holes drilled through the crest of the arches to the oil sands get gas, while those in the basins get brine, the oil being found between these two limits. A reference to Plate LXV. will make the matter clear. The oil sands are not always uniformly porous, and there are spots where the texture is too close to permit of the passage of fluids through them. Hence it is that, in these spots, the wells are "dry" and unproductive. The field is, moreover, practically free from faults, so that the fluids can move from one place to another without interruption, which could hardly be expected in our much faulted and irregular formations.

The production of the American oil wells has been enormous; and, as the oil is not being manufactured in nature's laboratory at anything like the rate at which it is being consumed—if, indeed, it is now being thus manufactured at all—it is clear that, sooner or later, the supply will begin to give out. No oil well has yet been found that goes on producing perennially, and the production is solely kept up by the discovery of new "pools." The natural gas which, for several years, supplied Pittsburg with a clean and cheap fuel, and greatly added to the wealth and prosperity of that important manufacturing centre, is already diminishing in quantity, and the city is again returning to its original smoky condition.

The following table, taken from the Annual Report of the Second Geological Survey of Pennsylvania, 1890 (by Mr John F. Carll), shows that the total production of the oil wells of Pennsylvania and New York reached the first maximum in 1882, and declined irregularly till 1888. There has, however, since then been a rapid recovery, and the production for 1891, taking the average of the first seven months of the year, will probably be

not much below that of 1882. My data for the last two years are from "Stowell's Petroleum Reporter" for August, 1891 (published monthly in Pittsburg.) To give a more graphic idea of the growth and fluctuations of the petroleum industry, I have plotted from these figures the accompanying diagram (Plate LXVI.) of the production from 1859 onwards.

TOTAL PRODUCTION.

Years.	Barrels of 42 gals. capacity.	Years.	Barrels of 42 gals. capacity.
1859,	2,000	1876,	8,968,906
1860,	200,000	1877,	13,135,671
1861,	2,110,000	1878,	15,163,462
1862,	3,055.000	1879,	19,741,661
1863,	2,610,000	1880,	26,029,631
1864,	2,130,000	1881,	27,376,509
1865,	2,721,000	1882,	30,467,000
1866,	3,732,000	1883,	24,226,864
1867,	3,583,000	1884,	23,333,844
1868,	3,716,000	1885,	20,891,992
1869,	4,351,000	1886,	25,080,460
1870,	5,371,000	1887,	21,286,560
1871,	5,531,000	1888,	16,126,580
1872,	6,357,000	1889,	22,376,690
1873,	9,932,000	1890,	28,684,620
1874,	10,883,000		
1875,	8,801,000	Total,	397,975,450

ANTHRACITE COALFIELDS.

After visiting three of Mr Carnegie's great iron and steel works at Pittsburg, as well as other places of interest, where, until quite recently, natural gas has been the sole fuel for raising steam, I left on the 20th of August for Pottsville, in the celebrated anthracite region of Pennsylvania.

Pottsville is situated among the picturesque forest-clad ranges of the Alleghenies, 200 miles east of Pittsburg. It is located in an isolated basin of Carboniferous rocks, which have been bent and twisted into great folds with steep sides, by the tremendous

To illustrate Mr. H.M. Cadell's paper.

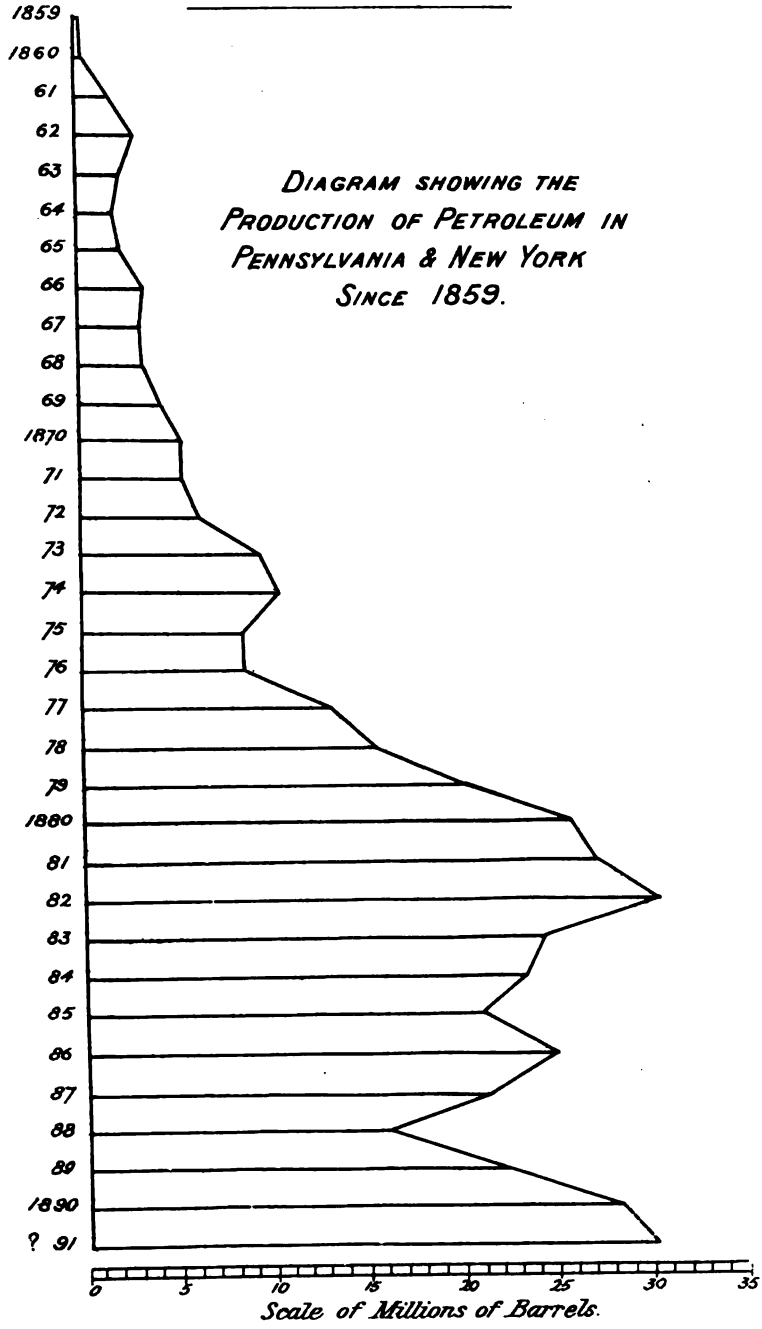

forces which ridged up this part of America into the Appalachian mountain system. When coal beds have been much squeezed by such movements, it is usually found that they have undergone more or less metamorphism, and have lost a great part of their hydrocarbons, becoming converted into blind coal or anthracite, which contains over 90 per cent. of pure carbon. Had the crumpling and metamorphism been carried further, the coal beds would have passed from the condition of anthracite to that of graphite, which consists of pure carbon, and is found in many old and much altered formations.

There are four tolerably distinct anthracite coalfields, all of which are situated in the extreme eastern portion of Pennsylvania. Each coalfield consists of a series of long, narrow, synclinal folds, either joined together so as to form a single trough with a highly corrugated bottom, or isolated from one another like a collection of long thin canoes laid side by side, and sometimes touching at places. The anthracite coalfields are entirely isolated from the great bituminous coalfields to the west by the high forest-clad ranges of the Appalachian mountain system, along which older Palæozoic formations rise from beneath the Carboniferous strata in a series of long ridges, with a highly complicated geological structure.

The anthracite seams are situated chiefly above the great Pottsville Conglomerate bed, which, as already stated, lies beneath the Lower Productive Coal Measures in the bituminous coal region to the west, so that, roughly speaking, they may be regarded as the representatives of the lower coals in the Pittsburg district. It is, however, as yet quite impossible to correlate any of the thick beds of anthracite with any of the thin bituminous coals of the Lower Productive measures, as they seem to have been formed under quite a different set of physical and topographical conditions. The thicknesses of the various seams of anthracite and of the intervening strata are exceedingly variable, so that it is not possible to give a general section which can be applied over any very extensive area. The following section, however, which is taken from the Pennsylvania Geological Survey Report for 1885, p. 329, will show the great thickness and value of the formation in the southern or Pottsville coalfield :—

BELMONT ESTATE, EAST OF POTTSVILLE.

		Thickness in Feet. Rock.	Coal.
1.	Lewis Coal-bed, -		8
2.	Interval, - -	210	
3.	Spohn Coal-bed, -		8
4.	Interval, - -	210	
5.	Palmer Coal-bed, -		3
6.	Interval, - -	263	
7.	Charlie Pott Coal-bed,		3
8.	Interval, - -	78	
9.	Clarkson Coal-bed,		7
10.	Interval, - -	83	
11.	Selkirk Coal-bed, -		7
12.	Interval, - -	120	
13.	Leader of Coal, -		3
14.	Interval, - -	45	

IN VICINITY OF POTTSVILLE SHAFTS.

15.	Peach Mountain Coal-bed,		5
16.	Interval, - -	60	
17.	Coal-bed, - -		3
18.	Interval, - -	58	
19.	Little Tracy Coal-bed,		6
20.	Interval, - -	198	
21.	Coal-bed, - -		2
22.	Interval, - -	40	
23.	Little Diamond Coal-bed,		3
24.	Interval, - -	122	
25.	Diamond Coal-bed,		6
26.	Interval, - -	158	
27.	Little Orchard Coal-bed,		3
28.	Interval. - -	25	
29.	Orchard Coal-bed, -		4
30.	Interval, - -	190	
31.	Primrose Coal-bed,		8
32.	Interval, - -	91	
33.	Holmes Coal-bed, -		4
34.	Interval, - -	70	
35.	Leader of Coal, -		4
36.	Interval, - -	140	
37.	Mammoth (Top Split) C.B.,		7
38.	Interval, - -	15	
39.	Mammoth (Bot. Split) C.B.,		25
40.	Interval, - -	60	
41.	Skidmore Coal-bed,		8
42.	Interval, - -	72	
43.	Seven-foot Coal-bed,		3
44.	Interval, - -	80	
45.	Leader of Coal, -		
46.	Interval, - -	25	
47.	Leader of Coal, -		2
48.	Interval, - -	25	
49.	Buck Mountain Coal-bed,		8

ECKERT COLLIERY, TREMONT.

50.	Interval, - -	554	
51.	Coal-bed, - -		2
52.	Interval, - -	50	
53.	Coal-bed, - -		2
54.	Interval, - -	55	
55.	Lykens Valley Coal-bed,		10
	Total thickness of Rock,	3097	
	,, ,, Coal-beds,		154

Total thickness of Coal Measures, 3251 feet.

On reaching Pottsville, I made my way to the office of Mr R. C. Luther, the General Superintendent of the Philadelphia and Reading Coal and Iron Coy., which owns some of the largest and most important anthracite collieries in the region. Mr Luther kindly sent me on to Shenandoah City, ten miles north of Pottsville, in the Western Middle, or Mahanoy and Shamokin field,

where some of the best developed collieries are situated within a short distance of one another, having supplied me with a letter of introduction to Mr John L. Williams, the Division Superintendent of the Shenandoah Collieries. On nearing my destination, the train moved upwards along the bottom of a valley, the sides of which had formerly been thickly wooded, but were now to a great extent bare or covered with tree-stumps and copsewood, only a few of the old trees having been left standing. The hill sides were thickly studded with pits, mines, coal dressing and breaking works, and huge heaps of culm, and coal dirt, which was washed down the slopes at many places and spread over the bottom of the valley in hideous black mud flats, through which the blighted trunks of dead pine trees rose gaunt and grim, while the waters of the Mahanoy Creek in the centre of the glen had the colour of ink from the fine refuse of the coal washing carried on at every colliery along its banks.

The Western Middle Coalfield has a length of about 40 miles, and a maximum breadth of about 5 miles, while the general direction of strike and outcrop of the seams is a little north of east. Shenandoah is geologically in a basin, the thickest coal in which is the Mammoth seam which is extensively mined in the neighbouring pits, and crops out steeply on the north and south sides of the town where it is at places worked opencast. I found Mr Williams ready to show me round, as Mr Luther had very kindly telephoned in advance, so that my letter of introduction was not necessary. Mr Williams is a Welshman by birth, of great experience and ability, and spared no time or trouble in explaining the system and working of the large collieries under his charge, and rendering my visit both interesting and instructive. We drove round and spent a long day in examining the surface and underground arrangements at some half-dozen of the shafts in the vicinity of Shenandoah.

The seams in the mines are thick. The Seven-foot seam has at places a thickness of 7 ft., and the Buckmountain seam a thickness of 12 ft., while the Mammoth Bed has, with the two thick bands of dirt that it here comprises, a total thickness of over 50 feet. These dimensions, however, are very variable, and the thicknesses of the seams and intervening strata alter very rapidly within

comparatively short distances. The coal is worked on the pillar and breast or pillar and room system, and the size of the pillars and percentage of coal removed vary according to the dip, thickness, and character of the roof of the seams. In some districts the proportion of coal removed where the dips are high has been as low as 51 per cent., while in other districts with flatter dips, and under the more modern improved systems of mining, as much as 80 or even 85 per cent. of the original seam is said to have been taken out. These percentages, however, do not represent the amount which is converted into commercial fuel, as the coal has to be broken and separated from the large proportion of blaes and dirt it contains before it can be sent to the market. This preparation for the market is attended with great waste as the huge culm and dirt banks round all the collieries testify. The improved methods of screening, breaking, sorting, washing, and classifying the coal which now obtain, have greatly tended to diminish this waste, and indeed in some cases it pays to turn over the older rubbish heaps and take out much coal that could not be sold under the more wasteful methods that were in vogue ten years ago. From 1820 to 1883, of the 59 per cent. of the original contents of the coal seams which were brought to the surface, more than half was thrown on to the waste heap. Since then, of the 70 per cent. taken out, only one-third has been lost in the dressing, a circumstance due not only to better methods of cleaning, but also to the demand for small sizes of coal, which were formerly of no economic value. At the St Nicholas Colliery, there are two slopes or mines where the Mammoth seam is worked downwards from the crop. The large breaker supplied by these slopes puts through in an ordinary day of 10 hours some 2000 to 2500 tons, and the breaker at the adjoining Ellangowan Colliery usually puts through 1800 tons a day, but has for a month dealt successfully with 2000 tons every working day during that period.

The huge Mammoth seam has been mined to its full thickness under the town of Shenandoah, and the reckless way in which the pillars were robbed when the workings were in progress, some 20 years ago I was told, began to terrify the inhabitants, who thought the whole place was to be engulphed. It will, I have no

doubt, astonish the members of the Mining Institute of Scotland when I tell them that at one part of these old workings the present operators, under Mr Williams, discovered that their predecessors had left a gigantic room between the pillars, 700 feet in length and no less than 300 in breadth, spanned by an arch of rock 60 feet high, at a depth of 400 feet below the surface. This extraordinary fact is perfectly well substantiated, as the breadth of the cavity is mentioned in one of the reports by Mr William Stein, the mining inspector of the district. Mr Stein, by the way, is another example of the successful Scot abroad, and I was glad to learn that as a young man he used to know my father. This vast cavity was found to exist just under one of the best houses in Shenandoah belonging to a Mrs Grant, the widow of another of our thriving countrymen, who lost his life while doing his duty in one of the collieries.

The plan adopted for preventing a general subsidence was both original and effectual. An 8-inch borehole was drilled in Mrs Grant's garden down to the highest part of the roof of the cavity below, and into this was conveyed from a neighbouring waste bank a thick stream of culm and water. The culm when dry packs closely together into a solid mass, while the small quantity of water required to transport the bulky volume of its light particles filters away through the deposit, and can readily be pumped out at the nearest shaft. In this way not only has the threatened calamity to the town been successfully averted, but a good "free toom" for the colliery waste has been found. But more than this. It has been ascertained that the culm below packs so well together that headings can be driven through it, and the roof being thus held up the remaining pillar coal can be taken out with safety and profit. I went into part of the workings which had been thus silted up, and saw a heading in the dry culm, the walls of which were wonderfully steep and solid.

This system of filling up old coal wastes in thick seams has been extended to other places where the necessary conditions are present, and several holes had been drilled and were still in process of drilling at other collieries I visited. Of course it is not everywhere that the necessary conditions for the success of the system are to be found. I bethought myself, however, of the old

Wester Main coal pillar workings below Bo'ness, where the roof of a seam some 8 feet thick or more, which was worked about a century ago, has within the last two years fallen in suddenly and caused some very alarming and costly subsidences. We have in Scotland, it is true, no anthracite culm to dispose of, but I think that the idea is a brilliant one, and might in certain circumstances be well worth the consideration of our Mining Institute.

Another point that interested me greatly was the existence of a large reversed fault, or small "thrust plane," which has now been clearly proved to run through part of the Shenandoah coal-field. With us ordinary or "normal" faults are, unfortunately, phenomena of everyday experience, but in the anthracite districts they are, I believe, almost unknown. In fact, faults of any sort are so rare in that region that their nature seems to be but little understood. Of late, however, clear evidence has been obtained that at least one reversed fault, such as are common in highly crumpled and compressed mountainous regions, has been instrumental in altering the lie of the anthracite beds, and for want of the requisite geological knowledge much money has been lost to some of the former colliery owners of the district. The section (Plate LXVII.), which is drawn to a true scale of 800 feet = 1 inch, from published mining plans and from information supplied by Mr Williams, will make the matter clear. In the Kohinoor Colliery, west of Shenandoah, the shaft, 425 feet deep, is sunk on the Mammoth seam, below which, at a distance of about 160 feet, the Buckmountain bed occurs. The beds rise steeply from the bottom of the pit, on the north, and crop out on the hill side above the level of the pit, as shown on the section. South of the colliery the Buckmountain seam has been long known to crop out, with a dip to the south however, while the Mammoth bed occurs above in its proper place. The existence of a large reversed fault or thrust not being thought of, it was formerly supposed that there must be a return outcrop, as shown in dotted lines, between the shaft and the Buckmountain seam, and that, in fact, there must be a so-called overturned basin, the strata in the southern part of which, being steep and upside down, were not adapted for convenient working. Instead of this, it has been ascertained that the seams which are flat at the shaft do not

To illustrate Mr. H.M. Cadell's paper.

SECTION AT KOHINOOR COLLIERY.
Scale 1 inch = 800 feet.

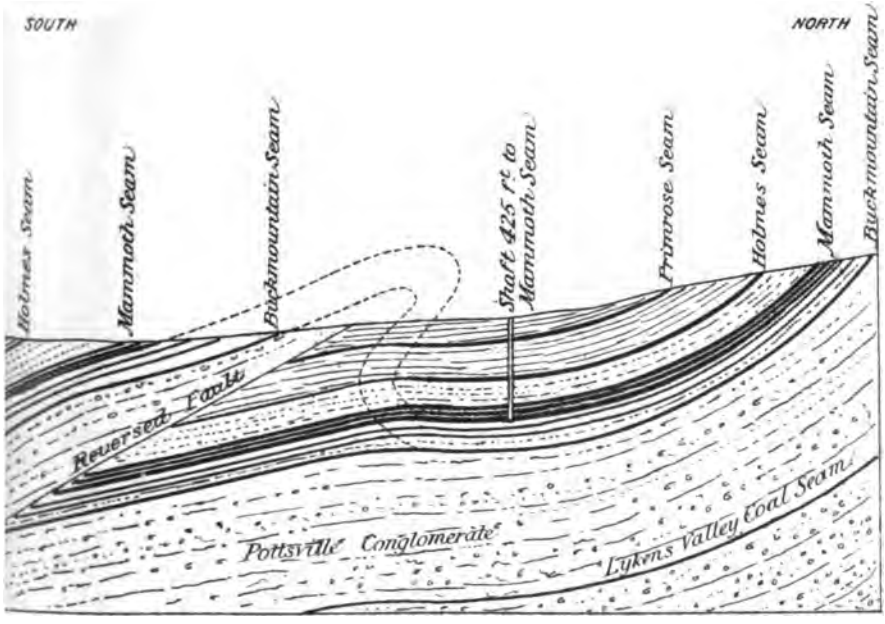

Illustration of the effect of a Reversed Fault or Thrust Plane in altering the Structure of a Coalfield.

To illustrate Mr. H. M. Cadell's paper.

SECTION AT SHENANDOAH CITY COLLIERY.
Scale 1 inch=200 feet.

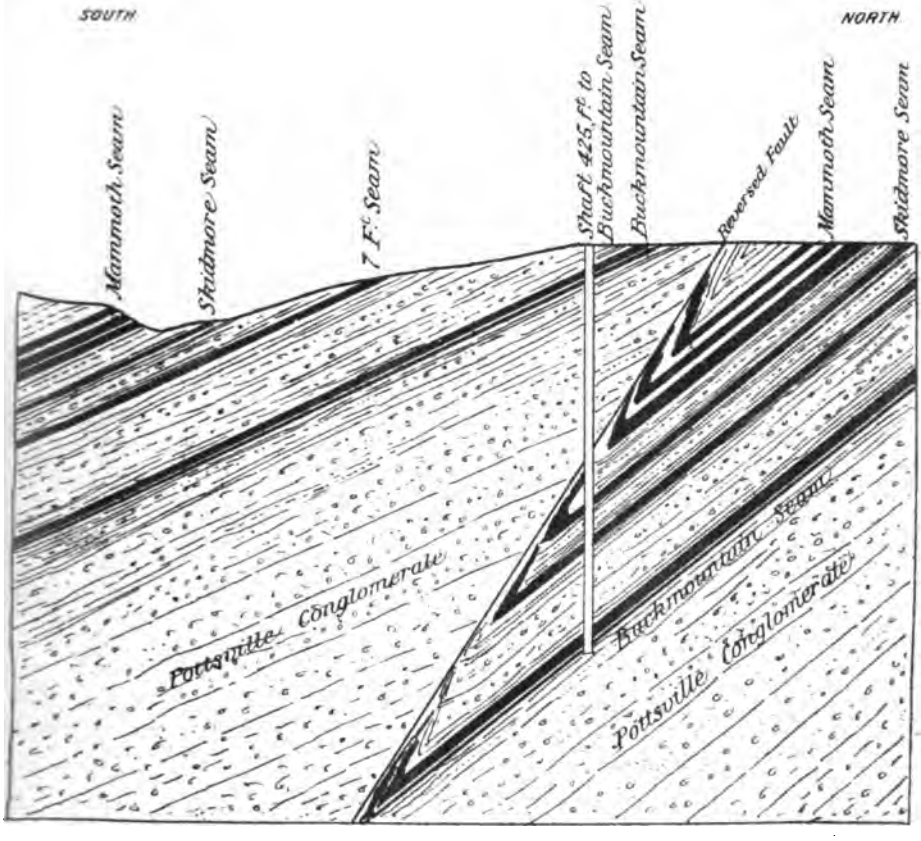

Illustration of Thrusting or Reversed Faulting of Coal Strata as proved in the Shenandoah Anthracite Collieries.

really begin to bend up to the south and form part of a basin at all, but at a distance of 60 yards from the pit bottom they again begin to resume their southerly dip, and whereas the former operators thought the colliery practically exhausted, the present company have opened up a fine set of dip workings, which run 500 yards down the seam, whose angle of inclination is about 15 degrees. It is quite clear from the figure that there must be here a large reversed fault, as there is no room for an overturn of the strata such as was formerly supposed. The actual plane of fracture has, so far as I heard, not been found in this colliery, but in the Shenandoah City Colliery, three-quarters of a mile further east it has been passed through in the shaft and proved clearly in the workings of several seams, as is shown in the accompanying Plate LXVIII. The Buckmountain seam was passed through twice in the same vertical section, both times dipping to the south, and the workings in the overlying seams clearly show that there is here no overturned basin such as is shown on the geological maps and sections of the district, but a true plane of thrust, the edges of the strata and coal beds being curled up and crumbled just below it. I have gone into some detail on these points as their significance is considerable from a miner's point of view. If, as Mr Williams said, the life of a colliery has been increased 20 years by the discovery of a thrust plane, then the more we know about these and other out-of-the-way phenomena, the more likely are we to keep our eyes open in the future and be on the lookout for things we would not otherwise have expected to find.

Here, as at Pittsburg, there are many foreigners among the workmen. The hardest and least skilful work in the mines and breakers is done chiefly by Poles and Hungarians, who, as a class, along with the Italians, are the most dangerous and disliked of all the foreign immigrants to the country. A couple of decades ago there was also in the Mahanoy and Shenandoah districts a notorious gang of Irish ruffians, the "Mollie M'Guires," now called the A.O.H. or Ancient Order of Hibernians, whose object was to assassinate men who were obnoxious to them, or managers who did not give them the profitable jobs they wanted in the collieries. Mr Stein, who related to me several thrilling stories of their doings,

had several times received letters from them, illustrated with a coffin and crossbones, telling him that his days were numbered. Between 1855 and 1875 some thirty-one murders were traced to their members. Of these killed, however, only one was a Scot, David Muir, from Ayrshire, who was put to death because he wanted to work on Roman Catholic holidays. The others put out of the way were mostly English and Welshmen, who then as now seemed particularly obnoxious to the wild Irish of the west. In 1875, however, the gang was broken up, twenty-two of its members being hanged, and since then honest people have been allowed to do their work unmolested.

The mines and breakers give employment to a large number both of men and boys. The miners get on the average 8s a day, and labourers 6s 6d. Boys of fourteen (the age when they go below) get for attending the doors and switches about 19s 4d a week of fifty-eight hours. After one or two years they get for driving one mule 24s to 28s, and for driving two mules 32s. When they can drive three or four mules together they get about 40s a week, which is equal to the wages of labourers working inside the breakers. The boys, twelve years of age, who pick the dirt from the coal at the breakers, get 10s per week.

The total cost of labour in connection with the breaking and cleaning the coal is 1s per ton, and at present, I was told, the selling price of 7s per ton barely leaves any margin of profit over the cost of production.

In conclusion, I have to apologise for the very sketchy nature of my notes on the regions I visited. I have only picked out a few of the many interesting features of these regions, and have left unsaid much that might have been mentioned; but I do not claim, and have indeed no time, to go exhaustively into the matter, and any one who wishes more details and figures can get them by applying to the elaborate annual reports on the mineral statistics of the United States, and to the annual reports of the Pennsylvania Geological Survey, which contain descriptions not only of geological phenomena, but of the methods of mining, producing, and disposing of the various natural products of which I have spoken.

CALIFORNIA STATE
Mining Bureau,
SAN FRANCISCO.

THE MINING INSTITUTE OF SCOTLAND.

GENERAL MEETING,

HELD IN THE

ROOMS OF THE CHRISTIAN INSTITUTE, GLASGOW,

23rd December, 1891.

J. B. ATKINSON, Esq., President, in the Chair.

The minutes of the last General Meeting were read by the Secretary, and confirmed.

Mr NEIL BALLINGAL, factor, Sweetbank, Markinch, was elected by ballot as an ordinary member.

The following discussions then took place :—

DISCUSSION OF MR GEO. A. MITCHELL'S PAPER ON "HUTCH WHEELS."

The SECRETARY said, in reference to a remark made by Mr Mitchell that none of the specimens of hutches showed a hutch in which the wheels turned in the axles, it so happened that he had got a drawing of a hutch of that kind connected with Longriggend Colliery too late to be included along with the others but since issued and shown on Plate LV. Messrs Hurst, Nelson & Co.'s estimate of cost was £2 4s.

The PRESIDENT said the other day when he was down one of Arden pits he saw a device for checking the speed of hutches something like the slippers they put under rolley wheels. Two of them were placed under the wheels, and the hutch rested upon them. Edge wheels and tram plates were used, and the whole load moved forward on the slippers. A sketch of one of them is here shown.

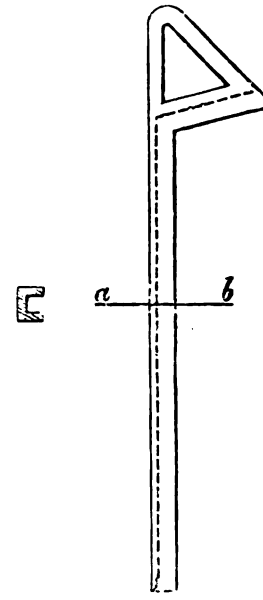

GOOSE.

Mr RONALDSON — Does it create more friction?

The PRESIDENT answered in the affirmative.

Mr FAULDS said they were frequently in use in steep roads, and are called a goose.

Mr ARCHIBALD—And they require a straight road.

Mr JAMES PRENTICE said they worked very well. He used them principally for horse roads in steep workings. By applying them to the foremost hutch, it would create as much friction as three hutches would do snibbled. There was no difficulty, except at the bottom of the incline where the driver uncoupled his hutch and drew it forward, and the bogey went back. It saved the rails and also the wheels. The only thing was they laid the

rails three-quarters of an inch slacker in the gauge. They were a capital device for saving the wheels, and were made of malleable rail turned up at the ends.

The discussion of the paper, in the absence of Mr Mitchell, was further adjourned.

DISCUSSION OF MESSRS ATKINSON'S PAPER ON "THE PRACTICAL APPLICATION OF ELECTRICITY TO MINING OPERATIONS."

The SECRETARY said he was sorry that, on account of an overlook, Mr Atkinson had not had an opportunity of replying to the queries addressed to him at last meeting.

Mr JAMES PRENTICE said he did not know if the Messrs Atkinson said anything about the insulation of the machinery in their paper. He rather thought not—at least, he had not observed it. In ordinary driving by electricity, the direct action came to a termination at the belt, and they might say the motor is practically insulated by the belt. But in driving from the motor shaft, there is a direct metallic contact with the motor through the gearing of the drum and the wire ropes or the pump or pump rods. Now, it was a most important detail the insulation of a machine of that description, and he would be glad if the Messrs Atkinson would describe the method of insulating the wheels from the motor when in direct contact with the motor shaft. He had not seen any satisfactory method of insulation.

Mr ARCHIBALD—Do you mean there is a considerable loss of power?

Mr PRENTICE—Not of power, but the electricity may be dissipated without actually doing its work.

Mr ARCHIBALD pointed out that, on plates LVI. and LVII. the connection was direct from the motor to the intermediate gearing, so that there must be some method of preserving the power.

Mr H. M. CADELL did not think that this was a question that needed consideration, because the machine was insulated before getting to the driving shaft, which was entirely insulated.

Mr THORNEYCROFT said he had been lately in England seeing a good many electrical pumps which were doing well, but all the machines had a bearing on the outside of the driving pulley. This was a great improvement, and the people who had had experience of them had altered them from single to double bearings on the driving pulley.

The PRESIDENT said that had no reference to the application of electricity.

Mr THORNEYCROFT said it was purely a mechanical part of the machinery. All the machines that he saw would have fired gas had it been present. They talked of having the brushes covered in, and at one place a cover had been supplied, but the oversman said that they could not keep the journals clear with the cover on.

The PRESIDENT asked Mr Thorneycroft if he had seen any electrical machines in use in fiery situations.

Mr THORNEYCROFT said no. They were in the bottom of the intake airway only.

The PRESIDENT asked Mr Ronaldson if they had any electrical machines in the Western District.

Mr RONALDSON said they had applied electricity to a haulage machine at Cumnock. The last time he was there they were applying it to a pump, but meanwhile it was limited to the haulage.

Mr GEORGE BIRRELL said perhaps it would be as well to ask the Messrs Atkinson what provision they had made against sparking in case of the main conducting cable breaking. There had been a case in the North of England which nearly put them out of their wits.

The PRESIDENT said he thought that Messrs Atkinson described a special cable they had invented to prevent sparking. He did not know whether the cable had ever been in actual use, but they claimed it would prevent sparking.

Mr ARNOTT said the description was at p. 219.

The PRESIDENT, in declaring the discussion adjourned, said this was a subject new to many. He must say for himself he did

not fully understand it, and possibly that would be the position of some others; and, if they had any difficulties, they should put them to Messrs Atkinson and get them solved.

DISCUSSION OF MR JAMES CLARK'S PAPER ON "THE MANUFACTURE OF PATENT FUEL."

The SECRETARY said he had a telegram from Mr Clark stating he could not be present as he was unwell. There was one remark made by Mr Clark in his paper which, he thought, it would be admitted was an exaggeration, viz., that this fuel could be kept a long time, whereas coal would be valueless if kept a very short time. The statement that coal was valueless by being kept a short time in stock was not correct.

The PRESIDENT said the Splint coal in the Hamilton district would keep any length of time. Mr Clark might be referring to his own particular seams where the coal was very soft. He asked if any gentleman had used the patent fuel for house purposes. He should like to hear of its suitability in that respect.

The SECRETARY said he had seen it used in a house in Glasgow in the summer time for a sick-room where a small fire was wanted. It was very good for that,—a quiet, durable fire, with very little heat.

Mr PRENTICE said that about the year 1884 Messrs William Black & Sons made a few tons of briquettes from Drumgray coal, and got a locomotive from the North British Railway Company which had been previously carefully tested for coal consumption, and ran a train for a day between Sighthill and Balloch (two runs) firing with these briquettes. The fuel did as much work as steam coal, weight for weight. The only difficulty they had with it was that in making the last run from Balloch the ash clinkered. There was no great quantity of ash—probably about half an inch thick across the bars—but it was run so closely that no air could get into the furnace through the bars, and all

the air for combustion had to be admitted by the furnace door. Accordingly, a good deal more fuel had to be used on this part of the run than otherwise would have been required. The driver and stoker said they had quite as good steam going down and coming up the first time, and going down the second time, as they usually had with ordinary coal. The fuel was in the form of bricks, and it was made in an iron brick mould, and compressed under a steam hammer, with 10 per cent. of pitch as the binding material. Some years afterwards, a party of gentlemen interested in the matter, tried a trip with the "Edinburgh Castle" steamboat from the Broomielaw to the Coast and back with briquettes made with farina as the glutinous matter, and it proved a fairly good trial. This fuel did very well going down, but when the fire got a little dirty, the furnace bars clinkered in this case also. If the matter of clinkering was overcome, the fuel would be quite as good as steam coal.

The PRESIDENT asked what was the class of coal that was used in making the briquettes.

Mr PRENTICE—Lower Drumgray dross.

The PRESIDENT—You are not able to say what particular coal was used in the locomotive previous to the trial.

Mr PRENTICE said it was probably the upper Drumgray or Slamannan Splint coal.

Mr FAULDS said it was of great importance to know the steam coal that was used, because lower Drumgray was about as good as they could get for patent fuel.

Mr PRENTICE said it was only the dross of the lower Drumgray coal. It was not clean dross. The coal was pretty much burned, containing 72 per cent. of fixed carbon, and was rather to the heavy side for steam coal. They added 10 per cent. of pitch.

The PRESIDENT—What is farina?

Mr PRENTICE—It is practically flour that is too inferior for ordinary use. Four lbs. was enough to make the paste, with 8 or 9 gals of water, and that was sufficient to stick together probably 8 or 9 cwt. of briquettes. They had to dry them, as they were pretty soft when made, and they had to be carefully handled, or they would be broken. After they were dried, they were quite hard, and stood transportation well. The cost was much cheaper

Mr FAULDS said, at the colliery referred to, the coal at one time was put over a one-inch riddle, and the dross that went through was left in the pit. Even after that, there was about 40 per cent. of dross, and now they were utilising it. The coal was extremely good. It was the "Bute Jewel," so named from being on the Marquis of Bute's estate. Now, he understood they left none of the dross in the pit, but made it into briquettes. He suggested that Mr Cadell should try something similar with his dross at Grange.

The PRESIDENT said the other day in the Upper Drumgray seam in Lanarkshire, he saw colliers using a riddle—a half inch or quarter inch riddle. The dross was a good deal mixed with fire-clay.

Mr ARCHIBALD, in reference to the prejudice against the smell and the smoke when pitch was used, asked what was the result of the use of farina.

Mr PRENTICE said there was no disagreeable smoke or smell from farina. The only smell was what they would feel in their own kitchens when toast was being prepared.

Mr ARCHIBALD asked if farina was better than the pitch.

Mr PRENTICE said in the proportion they had to put it in farina was very much cheaper. They could not do with less than 10 per cent. of pitch. He made some briquettes with 7½ per cent., and attempted it with 5 per cent., but he could scarcely get them to stick together. With 7½ per cent., they would stand handling, but not much rough usage. With 10 per cent., they could be thrown about in any way. The cost of the pitch at present to make a ton of briquettes will be about 3s 6d; the cost of farina in the same quantity, about 2s. Answering a further question, Mr Prentice added that his notion of farina was that it was the sweepings of the flour mill. It was a cheaper amalgam than pitch, but they must use a coal containing all its volatile matters. He should think they could not make a proper briquette with farina without 40 to 45 per cent. of volatile matter in the coal; with tar or pitch, 30 or 33 per cent. might do. The coal was ground before being made into briquettes.

Ramsay's admirably arranged fitting and laid out workings. The disloading arrangement on the pithead scaffold is especially worthy of commendation, and is very fully described and illustrated in the paper. All the workings I saw in America, even the 22in. seam before mentioned, were worked on the double entry system. In this, double headings or dooks, as the case may be, are driven from the pit or mine mouth; these are from 8 to 12 feet wide, with stoops of 5 to 20 yards between, and "dog-holes" every 20 or 30 yards put through for air. From these main entries, double levels are driven every 400 or 500 feet, from these rooms 15 to 40 feet wide are worked right and left if the inclination will suit. Between the rooms, pillars of from 3 to 10 yards in width are left, which are worked out when the rooms are holed through from the respective levels. In most cases the depths from the surface are inconsiderable, and the roofs are so strong that great liberties can be taken with the mode of working without fear of creeps or crushes which, if practised here, would be sure to result. The coalfield at Mount Pleasant in all its accompaniments of seam, roof, inclination, and freedom from troubles was admirably suited for cheap production, and I believe is perhaps unsurpassed in this respect in the world. I was informed that coke could be produced for about a dollar per ton. The miners in America, especially in the South, work longer hours and more regularly, and, I think, harder than in this country, and I can substantiate all Mr Cadell says in that relation. One of the pits I visited in Alabama was entirely worked by convicts, who are hired out by the authorities at so much per month each. They are housed within a stockade near the pit, and marched there on completion of the day's task. The boss or oversman of this rough-looking lot was an Ayrshire man.

The SECRETARY, initiating the discussion, said the paper was most interesting. Mr Cadell had referred to the filling up of old wastes by small dross and water as an original method, but it was rather a curious fact that in similar circumstances at Bo'ness a Scotch mining engineer had recommended that the dredgings of the harbour should be run into the waste to fulfil the very conditions referred to by Mr Cadell.

The PRESIDENT supposed that all those coalfields would be

mapped out by the Geological Survey of America in
same way as the coalfields of this country were mappe

Mr CADELL said each State had its own survey, and
also a National Survey. There was first a rough survey
they got it more detailed, so that the maps were app
correct. The places where coal was worked were mor
stated than other places, but they had been boring
for coal and oil, and the approximate size of the va
fields had been well ascertained. Referring to Mr Di
munication, he said the coalfields he referred to exten
great area, and they worked some of the smaller sea
places, although, as Mr Dixon said, there was only
thick seam in the bituminous coal regions. In the
district it was quite different. The seams there wer
numerous, and were found over much more limited a
map.

The PRESIDENT said it was rather strange to he
working in America of a seam of 22 inches.

Mr CADELL said they must recollect it was a
distances were great, and coal expensive to carry
they could work a thin seam more cheaply when they
Hungarians, and convicts to do it. In the Rocky
there was coal of Cretaceous age, some 40 ft. thick, wh
visited, and they were working it from the mountain si
were merely scratching the outside, and great quantitie
to work.

The PRESIDENT asked if there were any seams
Carboniferous series.

Mr CADELL said there was none so far as he knew.

Mr PRENTICE asked if the coal in the chalk was sim

Mr CADELL said it was like the Carboniferous, but n
It was brownish, and rather dirty, and nearer the c
lignite.

The SECRETARY said they exchanged with the Uni
Government, and got their publications, including thei
maps and actual surveys of the workings. They were
a very neat and apparently accurate way.

Mr ARCHIBALD said Mr Cadell mentioned, in conne

CALIFORNIA S
Mining B

the oil-bearing regions, the Calciferous Sandstone. Strange to say, the position of their Scotch shales was there. He did not know anything in Scotland working lower geologically than the Pumpherston seam. He should like to know if Mr Cadell knew anything in Scotland at a lower depth. They might still have some untold and unknown wealth under their feet.

Mr CADELL said, so far as he had examined the shale, the Pumpherston seam was the lowest.

The PRESIDENT said in the Pumpherston district they were beginning to think their shales were above the Burdiehouse limestone. Now, if this was so, they had no mine workings, with the exception of the lead mines, under the Burdiehouse limestone. If they had any beds mined below the Burdiehouse limestone, these would be the lowest stratified workings in Scotland.

Mr ARCHIBALD said, while with the Clippens Coy., he advised them to put down a diamond bore. They began 50 or 60 fathoms under the Burdiehouse limestone, the shale lying at a heavy incline, and the bottom was about 200 fathoms under the Burdiehouse limestone. Now, it was a moot point whether the Pumpherston shales were above or below the Burdiehouse limestone. He was inclined to think that the shale was certainly under. That being the case, they had yet to trace the calciferous sandstone beyond that point.

Mr CADELL said he did not want to be dogmatic, but his belief was the Pumpherston shale was below the limestone, because they were on the top of an arch. He knew for certain there was oil shale below the limestone, because they saw it at Queensferry.

The PRESIDENT, by way of further illustration, referred to Mr Kirkby's section of the strata as seen on the coast of Fife from Anstruther round to St. Andrews.

Mr CADELL said he had seen it. He said, further, that it was curious that, with the exception of the Burntisland seam, there was no known shale in Fife. The Burntisland shale was probably the same as the Dunnet seam, which was some distance above the Burdiehouse limestone. There was another point. They knew the position of the Burdiehouse limestone and the Pentland shale, which was 25 fathoms above it, and from this position

they could go upwards to the Broxburn shale and Mountain limestone. If the Pumpherston shale was above, where did it come in? It must be below.

The PRESIDENT, in concluding the discussion, said he thought if Mr Cadell were to give a paper on the oil shales, it would be interesting, and he proposed a vote of thanks to Mr Cadell, which was cordially awarded.

BRISTOL'S ELECTRIC SAFETY LAMP.

The SECRETARY exhibited one of Bristol's electric safety lamps, and read the following particulars thereof which had been supplied to him by the makers:—

The Battery—The battery is known as the Bristol battery, and consists of 3 cells of accumulators made under Mr Bristol's patents. Its action is like all other accumulator batteries; if a current is sent through it for a certain period, it will afterwards when switched on a lamp, give off a corresponding current for a

corresponding time. The Bristol battery is by far the lightest battery in existence which means that for a given weight of the accumulator, Mr Bristol can store more current in his battery than can be stored in any other, and, therefore, for a given weight, his battery will give more light, or run the same light for a longer time than any other. This is a most essential quality, as the main difficulty with electric miners' lamps has hitherto been to get them sufficiently light without having to sacrifice any of the protection for the battery.

General Construction.—The battery plates are enclosed in a strong ebonite case, $\frac{1}{8}$in. thick all round, which again is placed in a metal box made of brass tube, No. 18 British wire gauge, with a flange at the top, to which the cover is fixed by means of screws. The ebonite cells do not touch the casing, but wooden plates are fitted into the space between them. In this way a very strong and simple arrangement is obtained which will stand the rough treatment and accidental shocks which a miner's lamp must be prepared for. The cover has an opening surrounded by a vertical wall into which vent-hole tubes from the battery are projected, and fitted with a special gas-escape plug. The battery is always giving off a small quantity of gases, and these must be allowed to escape. The whole is protected by a swivelled cover-plate by which inspection may easily be made, and now and then a little acid let into the cells to replace that lost by evaporation.

The Bull's-Eye—The bull's-eye consists of best hand-made flint glass, $\frac{3}{16}$in to $\frac{1}{4}$in. thick. It is spherical, which gives it great strength. This is another advantage. The lamp will throw the light not only forward, but the side walls, as well as the roof and floor, are equally well lighted. The miner can therefore not raise that objection to this lamp which is brought forward against the oil safety lamps that the danger from falling roofs and other causes of accident cannot be well detected, and that he, therefore, after all prefers the naked light of an ordinary open lamp. This lamp will throw the light even slightly backwards in all directions. The bull's-eye is screwed to the lamp bezel, and kept in position by a screw which only a special key can remove.

The Lamp.—The lamp is supported by a spring suspended from two hooks which are the terminals o and a slight pressure on the lamp will bring it to hooks and break the connection.

The Reflector is made of best enamel, which carefu has shown is far superior even to silver reflectors.

The Switch.—The switching on of the lamp is do pushing upwards the small metal piece underneath t The lamp goes out instantaneously when it is put figure shows the construction, and this is so simple t very well get out of order. By taking the bull's unscrewing the reflector it will be noticed that n visible when the circuit is closed or broken.

Duration of Light.—The duration as well as the st light depends altogether on the size of the battery shown will keep the lamp with practically the same hours. It seems not unreasonable, when it is clai amount of work turned out by a miner will incre this far superior light is placed in his hands.

Charging Power Necessary.—The lamps consume c at the rate of 1 horse-power for 160 lamps. Suppo were to be used in a mine, 250 at a time. The po would be one and two-thirds horse-power per 250 l two horse-power taken from a shaft as an outsid charging power would take from 6 to 8 hours, an power would then be two-horse power for eight hou of 250 lamps.

Charging Apparatus necessary for 500 *Lamps*, 250 *to be cha*

1 two-horse power dynamo, say, ...	
1 belt, ...	
1 voltmeter and 1 ammeter, ...	
1 switch, ...	
2 wooden trays, ...	
Connections, ...	

Cost of Lamps—

The present price of these lamps is 35s each, in quantiti 500 lamps, complete, would therefore cost ... ...

First cost would be for a 500 lamp plant, complete, ...

Cost of Running the Lamps Eight Hours a Day.

Battery—It is difficult to say how long the batteries may be expected to last, for this reason, that it was only invented 3½ years ago, and the first batteries from that time have still their full capacity. But, in order to get an approximate idea of the figure, suppose the battery would only last for 3 years, the cost of renewal of same would be about 5s per battery. The battery would last 8 hours a day in 3 × 300 days = 7200 hours, and the cost being 5s, or 60d, the battery renewal would come to $\frac{60}{7200}$ or ·0083d per burning hour.

Battery renewal per burning hour, ...	·0083d

Incandescent Lamps—These are the main source of renewals. The present price is 3s 9d each. The lifetime of the lamp may vary to some extent. Some lamps have lasted up to 1000 hours, but as a very low estimate, 600 hours may be taken as an average. 600 hours at 3s 9d = 45d, comes to ·075d per burning hour. Add 10 per cent. for breakages, gives ·0825d.

Cost of lamp per burning hour, ...	·0825d
Total, ...	·0908d

These are practically the only renewals wanted, the bull's-eye, case, and switch may last for many years.

The cost of maintaining a lamp in full working order would then amount to	·0908d
per burning hour, or ·724 per day of 8 burning hours. Per week it would be 3·982d, or say, per week per lamp,... ...	4d.

This amount would therefore keep the lamp always in working order, including renewal of such parts as from time to time might want it.

The power required has already been shown to be so small, that it hardly will show in the coal bill of a mine where considerable machinery already is in work, and there now remains only cost of attendance. One man will easily be able to attend to 500 lamps, 250 to be charged at a time, and the total cost can therefore be now approximately estimated—

Yearly Cost of 500 *Lamps, Plant, complete.*

5 per cent. on capital outlay, £921 0s 0d, ...	£46	1	0
Deterioration of machinery, 10 per cent. on £46 0s 0d, ...	4	12	0
Maintenance of lamps, 4d per week per lamp, ...	416	13	4
Attendant's wages, 35s per week, ...	91	0	0
H-Power, ...	10	0	0
Total, ...	£568	6	4

THE MINING INSTITUTE OF SCOTLAND.

GENERAL MEETING,

HELD IN THE

HALL OF THE INSTITUTE, HAMILTON,

28th January, 1892.

J. B. ATKINSON, Esq., President, in the Chair.

The minutes of the last General Meeting were read by the Secretary, and confirmed.

The following were elected by ballot as ordinary members :—

ALEX. TENNENT, Balbardie Colliery, Bathgate.
WILLIAM CLARK, Broxburn Mines, Broxburn.
HENRY FREW, Quarter Collieries, Hamilton.

The following discussions then took place :—

T

MR MITCHELL'S PAPER ON "HUTCH WHEELS."

No observations being offered,

The PRESIDENT closed the discussion, and moved a hearty vote of thanks to Mr Mitchell for his excellent paper, which was warmly accorded.

DISCUSSION OF MESSRS ATKINSON'S PAPER ON "THE PRACTICAL APPLICATION OF ELECTRICITY TO MINING OPERATIONS."

The SECRETARY said Mr Atkinson was not present, and had not been able, on account of being from home, to send a reply to the questions put at the last two meetings.

Mr THORNEYCROFT, as a further question asked if the Messrs Atkinson would say what they considered the best voltage to work at with an electric pump or haulage, and what area of copper there should be in the conductors to carry a given number of amperes a given distance. They might give the best formula for this.

Mr MITCHELL asked if Messrs Atkinson had ever made any experiments with the cable mentioned at p. 219. He had been speaking to an electrical engineer, who said he had seen an experiment with it, and that it was a failure.

Mr J. S. DIXON said, in addition to the information asked for by Mr Thorneycroft, it would be well to have the loss of power by wires of a certain superficial area. It was well known that the larger the wire the greater the effective power to be got from the motor, but he did not know the proportion or the rule by which to find this out.

Mr JAMES CLARK handed in the following description of his Company's electrical arrangements at Ormiston Station Colliery:—"Sometime ago a misfortune was met with in the shape of an inundation of a shallow basin of coal by surface water. It was being worked at an inaccessible place a long way from the pumping establishment, with a long circuitous underground connection,

ture, which would have been at least from £80 to £100 more, besides making and maintaining a road on the surface 500 yards long. Second, the great saving of time, four days against four weeks; the water was all pumped out long before the engine could have been erected. Third, it only takes about one-third of the cost per hour to keep this pump going."

The further discussion of the paper was adjourned.

DISCUSSION OF MR CLARK'S PAPER ON "THE MANUFACTURE OF PATENT FUEL."

Mr MITCHELL said he noticed that at last meeting there was a discussion as to the use of farina in the manufacture of patent fuel. Could anyone say what the cost of farina was per ton, and whether the experiment at Westrig was or was not a success?

Mr CLARK said he could not tell the cost of farina, but as he was thinking of going into briquette making, on hearing of this plan, he went to see it started. They made splendid briquettes, but they had to put them into ovens to dry them, and when they sent them into the market they crumbled down by the way when they got the slightest moisture. They were all right so long as kept dry, but the moment they were affected by moisture they crumbled down. Several waggon-loads were sent to Edinburgh, and were into gum before they reached their destination. It was cheaper than pitch, but was a failure.

The PRESIDENT said it might do if the waggons were covered.

Mr CLARK—But where are you to get storage? They would require to put them under a covered way. The thing was impracticable.

The SECRETARY pointed out that at page 270 Mr Prentice gave the cost at 2s.

The PRESIDENT asked if it was because the briquettes made with farina absorbed moisture that they were a failure.

Mr CLARK said he knew of no other reason. Several waggon-

loads were sent to Edinburgh, and the consignee would not take delivery. The second lot was sheeted, but still the briquettes were in the same condition.

Mr MITCHELL said he remembered hearing very much the same thing at the time they were being made, but it was stated as an advantage that, when put on the fire, they hardened; that, instead of softening, as was the case with pitch-made briquettes, they got harder; and that, therefore, they were more serviceable.

Mr CLARK said, besides that drawback, he thought Mr Prentice had pointed out that it took a very fine coal to make a farina briquette, whereas the pitch helped the coal. He did not think with farina the briquette would be nearly so good, and he thought it was utterly impossible to get them into use without their going to pieces. There were other things that could be used, but none were so cheap as the pitch.

The SECRETARY asked Mr Clark what was the market for briquettes?

Mr CLARK said his market was purely one for household consumption. In South Wales, they shipped for locomotive and steam purposes 60,000 to 70,000 tons per month, while in Sunderland they were mostly used for household purposes.

Mr DIXON asked Mr Clark if he had any experience of briquette making with a coal burned and useless for any other purpose. The pitch used might assist their burning qualities, and there were many coals which might thereby be utilized. The fixed carbon was there, but the coal would not burn.

Mr CLARK said he did not think, from the experience he had had, that the coal referred to would make a good briquette. The efforts of some people in this direction had not been a success, and he thought it was due to the dross being burned. He thought they would have been better if they had coked it.

Mr MITCHELL said, at page 268, Mr Prentice mentioned that the coal was pretty much burned, and that it contained 72 per cent. of fixed carbon, while they added 10 per cent. of pitch.

Mr M'LAREN said that previous to the erection of the Messrs Nimmo's briquette works, the dross was put in the waste.

The PRESIDENT asked Mr Clark if he could give an analysis of his coal.

Mr CLARK said he had never got his coal analysed, although he had got from Dr. Stevenson M'Adam an analysis of his briquettes. The briquettes spoken of, made of burned dross, would do for firing locomotives or steamboats, where there was a forced draught.

Mr DIXON said he meant coals more burned than Nimmo's. Could they be so utilised?

Mr CLARK said he did not think the coal referred to would do. It had been tried already under the auspices of Mr Pender, ex-M.P., who erected a large patent fuel work at Seafield, Bathgate, nearly twenty years ago, entirely to make briquettes from the coal, which they ground for the purpose. The Duke of Sutherland was one of the syndicate. He did not know how much they spent—it was only to be a "small experiment"—but it cost His Grace £35,000. It was a huge place, meant to produce a large output, but never did so.

Mr M'LAREN asked if they washed the coal.

Mr CLARK—No. It was the Houston coal.

Mr MICHAEL ROSS said he saw the work eight years ago, and some of the briquettes, though they had been lying all the time, were not out of shape.

The PRESIDENT, referring to the Houston coal, said it was not burned, but it was a soft, inferior coal.

Mr CLARK said it was not a bad coal. It was not far from Houston, where it was found in its best state.

The PRESIDENT said that at Broxburn the Houston coal was said to be of superior quality, but was at present unworked, so it could not be very good. There were a great many places where coal could not be worked from being too much burned, but which, if made into briquettes, and the volatile matter added by means of pitch, might be made into useful fuel.

The discussion was closed, and, on the motion of the PRESIDENT, Mr Clark was awarded a hearty vote of thanks for his excellent paper.

A REVERSE FAULT IN KILTONGUE COAL A SHANGIE COLLIERY.

By Robert M'Laren.

Reverse faults are of rare occurrence, and conse coming across one at the above colliery, I took notes v of bringing it before the members of this Institute.

Drumshangie Colliery is situated to the north-east in the County of Lanark.

The owners are Messrs The Drumshangie Coal Con the certificated manager is Mr William Stevenson.

The extent of the field is 200 acres, and the Kiltor found in 120 acres, fully three-fourths of which has be The field is intersected by a large slip of 40 fathon south-east and north-west.

The Kiltongue coal lies in the upper coal measure fathoms below the famous Airdrie Blackband ironston

No. 1 Pit, in the workings of which the fault was g to the upper Drumgray coal to a depth of 46 fathor Kiltongue coal in the south section is reached by mine.

The seam is worked long wall, with walls 14 yard the average inclination is 1 in 15.

A section of the seam is as shown in Fig. 1, Plate I

In working the coal at A, 20 yards from the larg Fig. 2, Plate LXIX), a hitch was met running nort The side of the greater angle was lying off on the top, showing an upthrow, but on cutting the "vees" it wa be a reverse fault with a throw downwards. The hitc almost nothing, and at the part where the throw was measured 2 feet. As it went to the rise it thinned angle of the "vees" was small, being 30°. In comi the fault the rise was 5°, and inside it the rise was 14

The section through A (Fig. 3) shows the posit throw. Throughout the seam various disturbances

met with in proximity to the large slip, and it is evident that this reverse fault is due to the same cause.

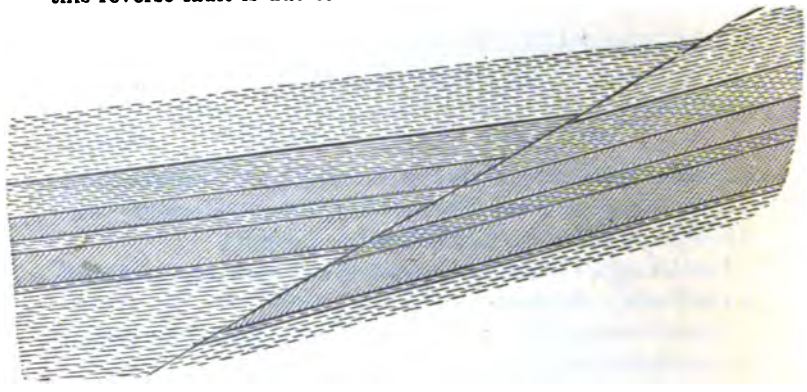

FIG. 3.—Scale, ⅛inch = 1 foot.

The origin of reverse faults has recently been clearly demonstrated by Mr H. M. Cadell in a series of experiments made by him, the results of which have been given in a paper read before the Royal Society of Edinburgh.* These experiments show that reverse faults are produced by horizontal pressure.

DISCUSSION.

The PRESIDENT said if any of them could give other examples they would be glad to hear them. He asked Mr M'Laren if, in the case mentioned, the parties were misled, and tried to find the seam in the wrong direction.

Mr M'LAREN said they began to pierce up into the roof, but, finding the "vees" lying very flat, they looked at the bottom and got the coal. They found it was a reversed fault. Since he saw it he had made inquiry, and heard of one 16 fathoms in extent in Carron district. They spent some hundreds of pounds in trying to cross it.

Mr DIXON said that in a great many of the French and Belgian coal-fields the seams, in many instances, were continuous. It was not necessary there should be a break in the strata.

* Experimental researches in Mountain Building, by H. M. Cadell, B.Sc., Vol. 35, Part 7, Transactions of the Royal Society of Edinburgh.

Mr M'Laren said there was a case at the Fife Coal Company's Pits at Dalbeath. They opened up the "vees," and it began to tumble right over, the coal following the line of "vees."

Mr Faulds said in the Bristol coal-field there is a reversed fault of many fathoms in the 2 feet seam in Spurtwell Pit, Kingswood, and what they call the scissors character of great faults between Pinkfield and Coal Pit Heath Collieries. This fault has an upthrow to the west of at least 100 fathoms, and about 1300 yards to the south becomes a downthrow fault to the west of some 14 fathoms, and has been traced to the point of intersection of the scissors. In the Blackband ironstone seams worked by the Dalmellington Iron Company, south of Ayr, scissor and reverse faults were frequently found, and also in the coal seams, but more frequently in the ironstone than the coal.

Mr Thorneycroft said at Twechar, Kilsyth, they had a doubling of the seam, so that if a bore had been put down at this spot it would have cut the seam three times; and at Gartshore, No. 3, there was a reversed fault 7 feet in extent. At Merryton, something approaching a reversed fault was seen, the "vees" was absolutely vertical, and the fault changed from a 7 ft. downthrow to a 9 ft. upthrow within a distance of 50 yards.

Mr Hogg asked Mr M'Laren if the fault he referred to had been found in any other seam.

Mr M'Laren answered in the negative. Still, there seemed to have been a cause of disturbance. There was a subterraneous river not far from the section. He remembered some years ago seeing, in a dook in the same colliery, the top coal away entirely on one side, while on the other it was doubled.

Mr Dixon said possibly this might be so in ordinary slips, but he pointed out what was likely to happen where a fold of strata bulged out like the cliffs on a sea shore.

Mr M'Laren said there was always the "vees" plainly to be seen in all throws.

Mr Dixon said that sometimes they were perpendicular and almost the reverse way. It was difficult to say whether they were up or down.

The further discussion of the paper was then adjourned.

SAN FRANC

THE MINING INSTITUTE OF SCO

VISIT TO HARBOUR TUNNEL AND C RAILWAY WORKS, GLASGOW,

AND

GENERAL MEETIN

10th March, 1892.

ARRANGEMENTS having been made with the eng contractors of the Harbour Tunnel and the Centra Glasgow, the members of the Institute visited these 10th March, 1892.

The party, about fifty in number, met at the Harb at twelve o'clock, and were shown over the wor contractors' foreman.

The large shafts at each side of the river have be the full depth, and the double tunnel to connec approaching completion, the excavation under the r carried on with the shield and under a pressure of ab in excess of atmospheric pressure.

At two o'clock, the party assembled at Ander preparatory to visiting the Central Railway. T met by Mr Thomas Nisbet, the resident engi

put them under the guidance of Mr Tait, assistant engineer, and other three officials. Dividing into four parties, they were conducted along the works from Anderston Cross westward to Maryhill. In this part of the undertaking, the works are very varied, both on account of the property passed through and the diversified nature of the strata; and abundant opportunity was afforded of witnessing the adaptation of the newest and best methods to the work in hand.

THE same evening, there was held a

GENERAL MEETING,

IN THE

ROOMS OF THE CHRISTIAN INSTITUTE, GLASGOW.

J. B. ATKINSON, Esq., President, in the Chair.

The minutes of the last General Meeting were read by the Secretary, and confirmed.

The following were elected by ballot as ordinary members:—

WILLIAM BIRRELL, Donibristle Colliery, Crossgates.
ANDREW NICOL, Bent Colliery, Hamilton.
HUGH PEARSON, Glengowan, Caldercruix.
JOHN MILLER, Clydesdale and Muirhouse Collieries, Wishaw.
A. WHITSON, Jr., 104 West George Street, Glasgow.

Office-bearers for session 1892-93 were nominated.

The following discussions then took place:—

DISCUSSION OF MESSRS ATKINSON'S PA
"THE PRACTICAL APPLICATION OF ELEC
TO MINING OPERATIONS."

Mr L. B. ATKINSON communicated as follows :—

Dealing with the questions which are printed on pag replying first to the question of the President, the dyn in mining work run at from 1000 revolutions for m 10 H.-P. to 400 or 500 revolutions for machines of the speed depending on the size.

In reply to Mr R. Martin's inquiry, the windi described has been built and very thoroughly tested. at the present moment at work, but is being placed i for working. The experiments with it, however, show very easily handled ; stopping, starting, and reversing effected by a movement of a single lever.

With regard to the question of Mr R. M'Laren upkeep of electrical plant, the authors have written on tion to two managers of pits where their machinery is at the following is one of the replies :—"About the cost c our electrical plant : No account was kept of the cost c the hydraulic pumps, that is as regards repairs and sto was very heavy ; *and as regards the present pump, the co and repairs has been so small as not to be worth taking int* This refers to a pump pumping about 130 gals. per mi lift of over 600 feet, which has now been running for o with the result mentioned. The other refers to t working an electric hauling plant, which has been in op about nine months, and the answer is as follows :—" C hauling plant has not been laid down sufficient time give a detailed comparison of repairs, stores, &c., with c air ; *but I can safely say the cost of working and maintain not be more than one-fourth that of working by compressed c first cost of putting down our plant was not more than c what it would have taken to put down a compressed air pla same work*, our motor being close upon a mile from the p

The work and maintenance of an electrical plan cheaper than one worked by steam or compressed air.

In reply to Mr Prentice's inquiry on page 265, on electrical machinery as ordinarily constructed, great difficulties have been found with the insulation, necessitating the use of belts; but, as the authors have already indicated in the paper, their object has been to do away with this, and it has been done by the special arrangement adopted for fixing the insulated wires on the armature. This being properly effected, no difficulty is found from defective insulation, and therefore it is feasible to put gear direct on the motor shaft.

With regard to the use of an outside bearing, under certain circumstances this may be required; but the authors have found that by the use of gearing, which brings the pressure close to the side of the bearing, it is not necessary in machines up to say 80 H.-P. to provide a further outside bearing. This, of course, is simply a question of mechanical design.

With regard to Mr Thorneycroft's remarks on the use of covers, this again is a question of so designing the bearings that the oil is properly cleared from them, and all the machinery which has been supplied by the authors' firm has these covers on them, and no difficulty has been found in their use. Machines with these covers on them are in use in pits considered fiery, and are also used for working coal-cutting machinery on the coal face, where nothing but safety lamps are used.

With regard to the non-sparking cable, this cable is in actual use, and by its use, even in the event of the cable being ruptured, it is impossible to maintain any dangerous arc or spark, and at the instant of rupture the whole circuit, as described, is disconnected at the pithead from the dynamo.

As to the questions asked on the 28th January, and in reply to Mr Thorneycroft, the authors have adopted the rule of not exceeding about 500 volts for fixed pumps or hauling machines, and for drills and coal-cutting machines, which have to be moved about, the limit has been placed at from 200 to 300 volts. The area of conductor for a given number of amperes is a matter which can only be dealt with by considering all the circumstances of the case, but should not, as a rule, exceed 1000 amperes per square inch, and even at this the loss of power over any extended area will be too great, and it is advisable to use more copper.

The question, in fact, is really one of balancing the interest on the capital outlay on cables against the annual expense in loss of power.

With regard to Mr Mitchell's inquiries as to experiments with the cables, probably the case mentioned by Mr Mitchell was where the authors had lent a specimen of the cable to Professor Sylvanus Thompson to exhibit at a meeting in Cardiff. Mr Atkinson had arranged the experiment and connections which showed the action of the cable; but at the last moment, and during the course of the lecture, Professor Sylvanus Thompson altered the connection, and by making a wrong coupling when he showed the experiment, as might have been foreseen, the result was not what was expected. He did not at the time explain this, and it gave rise to considerable misapprehension, for experiments made with the cable have shown that it is thoroughly effective.

In reply to Mr Dixon's inquiry, the following will give the loss of H.-P. in any given cable :—A full table of cables and the loss of power in them has been calculated by one of the authors, and is published on page 196 of the Colliery Manager's Pocket-Book for 1892. *Rule.*—Multiply the reciprocal of the area of the conductor in one-thousandths of a square inch by the square of the current in amperes, and by the number of yards in length, and by the co-efficient ·000033. That is,

$$\text{H.-P. lost} = \frac{1}{\text{Area in 1000ths of sq. in.}} \times \text{Amperes}^2 \times \text{length} \times \cdot 000033$$

Various gentlemen have spoken during the course of the discussion who have had practical experience in the use of electricity for pumping, and their experience apparently coincides with that of the authors, and with the gentleman whose experience has been recorded above, viz., that the upkeep of electric mining machinery has been considerably less than by any other means previously tried of transmitting power to the machinery.

The extensive plant mentioned in the paper, and described on page 225, has, since the paper was read, been got to work with most satisfactory results, and the authors will, no doubt, be able to arrange at some future time, should the Mining Institute

disposed to visit it, for them to do so, and form their own opinion as to the practical nature of the application of electricity to mining work.

Mr ROBERT M'LAREN referred to an electric machine just finished underground at Loganlea, where he had been told by the manager that the horse power of the motor was 30. The machine works at 200 volts, and is intended to be used in hauling and pumping in winning out to the dip with a gradient of 1 in 70. The gearing on the haulage machinery is 22 to 1. To reduce the speed of the machine, which is 1300 revolutions per minute, and which, starting suddenly, would damage the haulage machinery, a rheostat or resistance coil is attached to take up the power. The rheostat is composed of several spiral coils of wire. He noticed when the machine was started sparks were given off from the rheostat. This would be against it in a fiery mine.

Mr GRANT would like to have a simple answer to a simple question, viz., what was the actual duty performed by electricity compared with either steam or hydraulic pumps under the same conditions? If there were really two plants almost the same—the one electric, the other hydraulic and steam? If so, what was the ratio of the loss compared with hydraulic or steam pumping? He saw from Mr Clark's remarks he could not possibly contend with hydraulic or steam power either as to the first cost or the consumption of fuel, and that was an important point. His own opinion was that hydraulic and steam were more economical than electricity. With an ordinary dook pump, say three-quarters of a mile from the steam engine, they would get 70 per cent. of actual duty. He did not think they would get that with electricity. If so, he would like to know if it had been actually tested.

The PRESIDENT said he thought in the paper the Messrs Atkinson claimed that using electricity they got a higher useful effect than from power transmitted by ropes, steam, or compressed air, but he did not know that they pointed to any case where actually the same work was being done with the different classes of machines. That was to say, where they had the compressed air, ropes, steam, and electricity placed side by side.

Mr GRANT said he did not suppose that could be got, but some-

what similar conditions might be had. He suggested tha data might be got from the arrangements at Arniston, Newb and Whitehill.

The PRESIDENT, as there were no further remarks, closec discussion, and, on his motion, a hearty vote of thanks was acc to the authors.

DISCUSSION OF MR M'LAREN'S PAPER C "A REVERSE FAULT."

Mr DOUGLAS JACKSON communicated the following :—I splint coal workings at Ross Colliery, Hamilton, we came what seemed to be a downthrow hitch, with a well-formed " and lying off to the pavement. When cutting it, we recc the coal up three feet. At first, this looked like a reverse but in cutting up in the roof we found there were two d faults running into one another, and we had happened to them at their point of intersection. At Garriongill Co Overtown, there is a fault something of the same charac that described by Mr Faulds in the Bristol coalfield. Thi traverses a large part of the coalfield in a north-easterly dir and is almost parallel with the dip and rise. It has be through in all the seams from the Ell coal to the Virtu Along the line of the fault the metals are so much contorte it is difficult to know by looking at the "vees" whether it upthrow or a downthrow. It has been bared in the Splin a distance of fully 3000 feet. Two-thirds of this distance i upthrow of 7 feet, the remaining third being a dowr of 7 feet. This fault appears to have been caused by pressure, as a part in the Virtuewell seam has overlappe shows three distinct thicknesses of the seam, one above the in a distance of 14 feet. A bore put down at this point have cut the same seam three times, but on the same side fault. George G. Andre, in his treatise on coal mining, says it has been indisputably established that no fault traversir

set of beds will make an acute angle with the same bed on both sides of the fault." The section given by Mr M'Laren (Fig. 3, p. 286) shows that the same seam could be cut through by a bore hole a second time on both sides of the "vees." Perhaps Mr Faulds and Mr Thorneycroft could give some information regarding the reverse faults which they have spoken of, and if the section was similar to that shown by Mr M'Laren in Fig. 3.

Mr HUGH JOHNSTONE said he thought, notwithstanding Andre's remarks, those reverse faults were much more common occurrences than was believed. In most of the contorted districts, or where there were large faults, he thought it would be found that this was so. At Garscadden, where in the ironstone they had a clear "vees" on cutting through a hitch, it was found the ironstone had been thrown up from 4 to 6 feet, and he thought most managers could point to similar experiences.

The PRESIDENT, on the other hand, thought reverse faults were of very rare occurrence. In the North of England the lead mines were worked in the "vees" of faults, and there the direction of the dip or hade of the "vees" was always pretty constant. The amount and direction of the throw was generally known, and he did not remember ever meeting with an example of a reverse fault, and large areas of the "vees" were traversed. In fact, the working was almost entirely confined to the "vees" of the fault.

Mr JOHNSTONE asked if the faults were in the stratified measures.

The PRESIDENT, replying in the affirmative, said they were in the carboniferous limestone.

Mr ROBERT SEGGIE said in connection with the clayband ironstone at Kilbirnie, he had seen a downthrow of twenty feet although the direction of the "vees" indicated an upthrow.

The PRESIDENT said he should like to have an example of a reverse fault on a large scale,—say ten fathoms throw. In the examples given by Mr M'Laren and others the throw was small.

Mr MOTTRAM said he thought reverse faults were very common in the Bristol coalfield, and that a small book had been written on the subject by Mr Handel Cossham, giving illustrations on a large scale.

A REVERSE FAULT.

Mr ALEX. FAULDS said the following is a diagram of lined fault with alterations of throw or dislocation pro undulations of beds along it, A, B, C, D being the

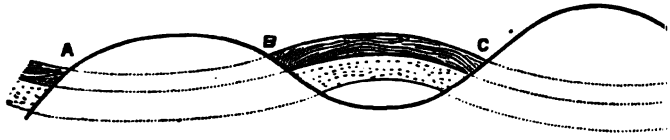

which the throw or dislocation reverses, and termed th Mr Dixon, at last discussion, spoke of a great ma Belgium and French coal seams being continuous, and t not necessary that there should be a break in the st seams generally dip to the downthrow and rise to the similar to that shown on the sketch by Mr M'Laren, and the contrary takes place, is the continuousness of th and French coal seams not due to these dipping a or distortions by faults, causing the fissures or vee faults, not being so well defined? Mr M'Laren throughout the seam in which the reversed fault w various disturbances have been met with in proximity slip, and as the reversed fault was not found in seam in the colliery, that showed that in such greatly seams reversed faults are likely to occur. That has als experience in coal and ironstone seams, but was always m and more frequent in ironstone seams, the throw or dis such reversed faults never exceeding six feet. Mr J. B late director of the Geological Survey of Ireland, sa never met with any reversed faults except on a v scale, and where it might easily happen that the exc more apparent than real, the apparent inclinations o being merely a local bend in a vertical, or nearly vert In the Journal of the Geological Society of Du VIII., is described a case of real occurrence of a rev as to the position of some beds in a colliery in th County, Ireland. I have no doubt many of the mem

Institute have traced the scissors character of great and even small faults. The scissors character of these faults is simply when the strata or seam in each side of the fissure or "vees" of fault is level, and which is the point at which you may say the throw or dislocation reverses. The following from that of the Lanesfield fault in the South Staffordshire coalfield may illustrate

better what is meant. The figures indicate the dislocation in yards.

The discussion was concluded, and, on the motion of the PRESIDENT, Mr M'Laren received a vote of thanks.

Mr M'LAREN then read the following paper on "A New Use for Old Ropes":—

"A NEW USE FOR OLD ROPES."

By Robert M'Laren.

It has long been a source of anxiety with mining managers what to do with winding ropes which have been thrown off, as they can be used for few purposes about a colliery; and the price received when disposed of is so small that, rather than sell them, they allow them to lie about as so much useless material, probably with the hope that a use will be found for them some future day.

Owing to the difficulty in disposing of some old iron winding ropes, taken from No. 1 Pit, Gilmerton, at a remunerative price, the manager, Mr Hutchison Burt, determined to utilize them on an incline, or "cran brae," in place of iron rails and wooden guides in use on the other inclines.

The colliery is situated to the south-east of Edinburgh, and is owned by the Gilmerton Gas Coal Co., Ltd.

The shaft (No. 1) is sunk to the Stairhead coal, at a depth of 88 fathoms.

From the shaft crosscut mines are driven east and west. On the west side the following seams are intersected in their order: Gillespie coal, Blackchapel coal, Coalpatty coal, Stinky coal, Glass coal, North Parrot coal, Corbiecraig coal, Peacocktail coal. The mine to the east side cuts through the Great coal seam. Six of these seams are presently being worked. The measures are in the carboniferous limestone series, and are highly inclined, the inclination varying from 65 deg. to 78 deg. The coal from the various seams is lowered to levels by inclines in cages or carriages. There are five inclines in operation—three with wooden guides and cages, one with iron rails and carriages, and one (Corbiecraig) with wire ropes and carriages.

Corbiecraig incline is 96 yards long, with 8 stopping places, 11 yards apart, worked by a drum at the top, 6 ft. diameter, with brake attached, and steel haulage rope $\frac{5}{8}$ in. diameter. The signalling is the usual method adopted in the steep measures. The inclination is 72 deg., except 30 yards or so at the top, which is 65 deg. On this incline the Corbiecraig coal and the North Parrot coal, about 8 yards back, are lowered. The latter is reached by back mining.

The section of Corbiecraig and North Parrot seams is as follows :—

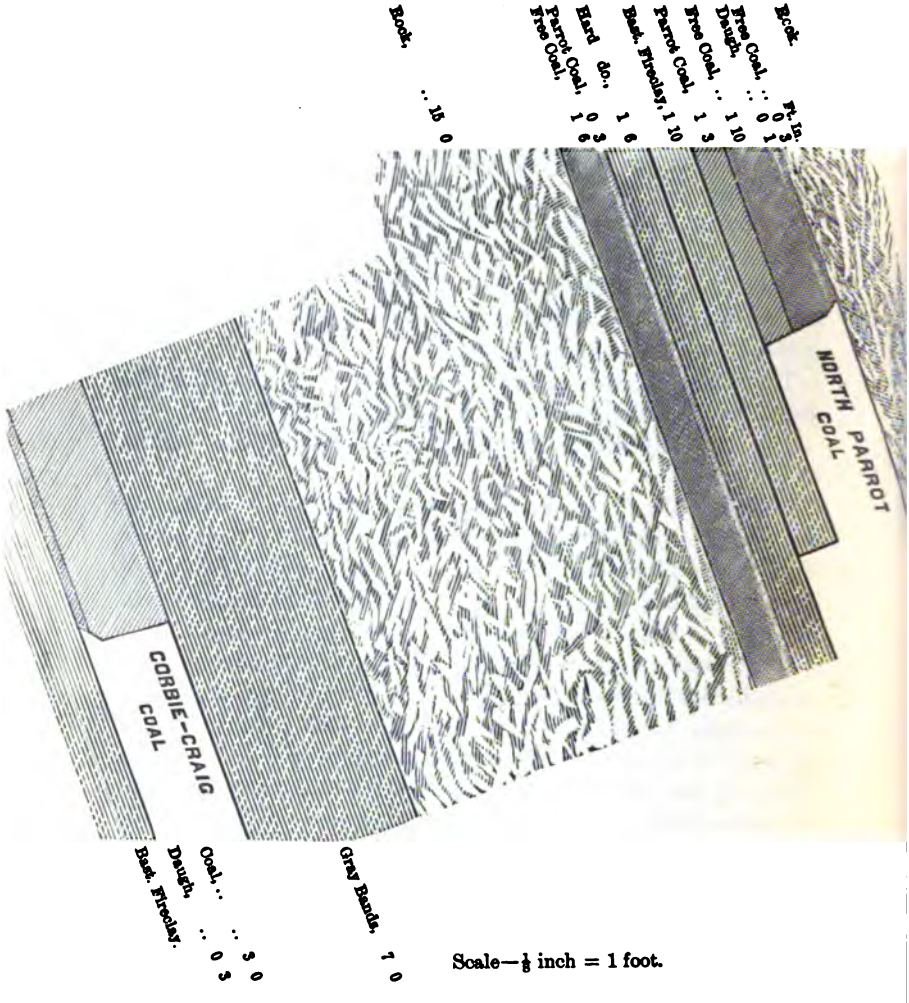

Scale—⅛ inch = 1 foot.

The Corbiecraig coal is worked stoop and room, stoops 20 yds. on level by 8 yds. to rise, with openings 9 ft. wide; and the North Parrot coal is worked longwall.

Roadway.—The road is 12 ft. wide by 4 ft. 6 in. high (average), and has a carriage and back balance way. Sleepers,

9 ft. by 8 in. by 3 in., are laid across every 4 ft., and on these are fixed planks 6 in. broad by 2 in. thick, laid longitudinally. Again, on the longitudinal planks the ropes, 3 in. circumference, are laid, and to make them rigid the following method is adopted :—At the foot of the incline a beam, 9 in. square, is fixed. Into this a hole is bored, and the rope is passed through, and is glanded on the under side of the beam. At the top the rope is

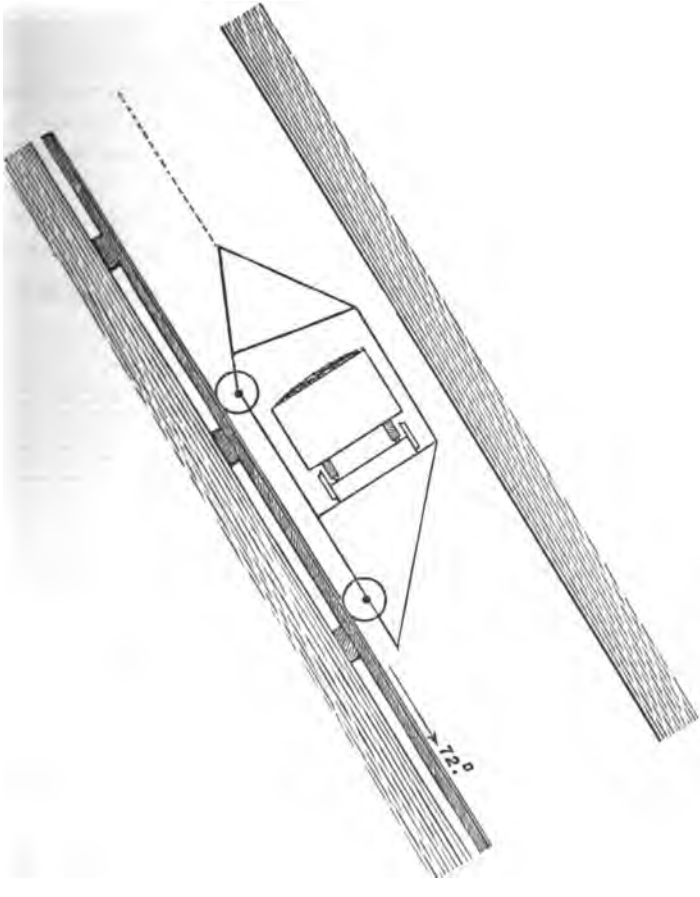

FIG. 2.—Section shewing Carriage and Tub on Incline.
Scale—¼ inch=1 foot.

fixed to a screw by means of a hose and muzzle, and as the screw is turned the rope tightens. As soon as the rope is stretched spikes or large nails are driven through its centre to fix it to the plank. The spikes are 8 ft. apart.

The gauge for the carriage way is 4 ft. 6 in., and for the back balance way 1 ft. 10 in.

Carriage.—The carriage (section of which is shown on Fig. 2) is 10 ft. long by 4 ft. 3 in. broad by 3 ft. high, is of angle steel, 2 in. by $\frac{1}{4}$ in., and carries one tub. The wheels are made with a groove 1 in. deep to fit into the rope, and are 5 ft. apart.

The speed of the carriage is twenty seconds for the journey from top to bottom, equal to 9·75 miles per hour; but the average is about half that speed. The weight of the carriage when loaded is 13 cwts.

Back Balance.—The back balance consists of a plank fixed to two axles, on which are wheels, same as on the carriage, and loaded

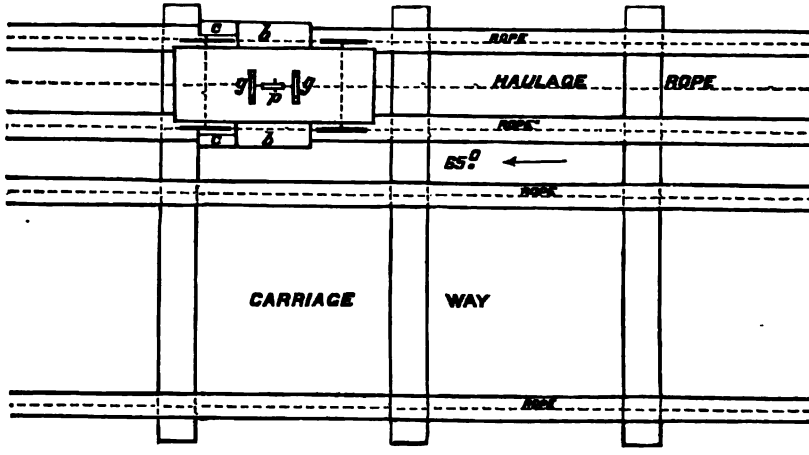

FIG. 3.—Plan shewing Second Back Balance and Carriage Way.
Scale—$\frac{1}{4}$ inch=1 foot.

up to the required weight. This back balance is insufficient for the part of the roadway which has the reduced gradient, and in consequence a second back balance is in use, which rests on a block, and is raised by the main back balance when ascending, and stops at the block when descending.

The second back balance (plan and section of which are shown on Figs. 3 and 4), is similar to the main back balance, except that at *b* is fixed a projecting piece of wood on each side, 6 in.

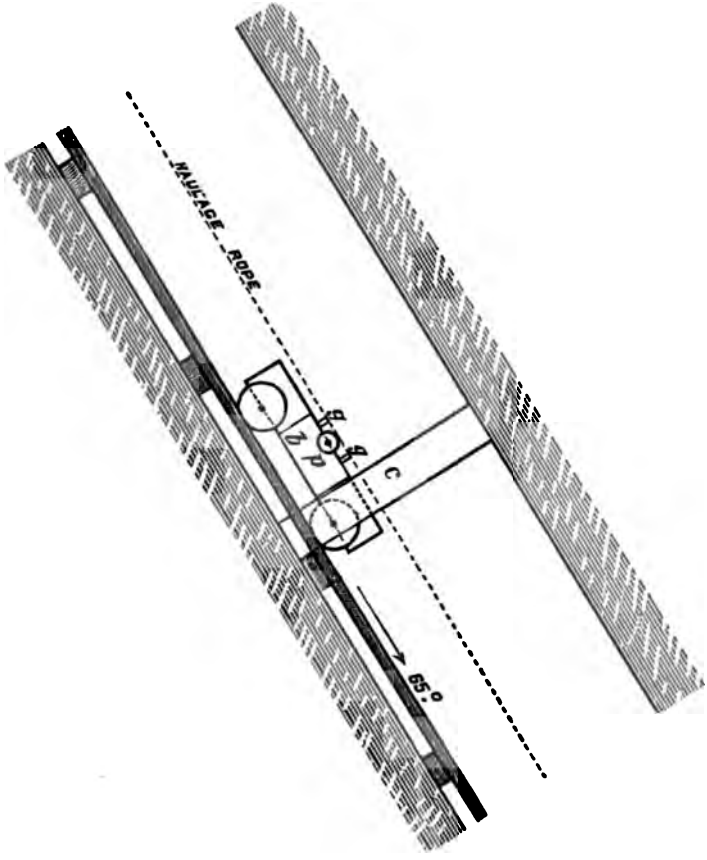

FIG. 4.—Section shewing Second Back Balance on Block.
Scale—¼ inch = 1 foot.

square, which come against the block *c*, and the back balance is brought to rest. The block consists of two planks, 9in. by 3 in. placed upright and firmly fixed between roof and floor.

To prevent the back balance when at rest from going over the block and tumbling down the incline, there is fixed at *p* a small pulley over which the haulage rope passes. The pressure of the rope on the pulley is sufficient to keep the back balance in its place, but, in case the rope should rise, two glands *gg*, raised in the centre are fixed close to the pulley, and the rope runs through them.

The incline has been in operation about six months, and has worked very satisfactorily, having given no trouble, neither carriage nor back balances having once left the ropes.

The advantages claimed for this rope road are :—(1st) It is much cheaper, as the ropes are of little value ; (2nd) It is easier fitted up, and, when compared with a similar incline fitted with iron rails, the cost is about one-sixth.

DISCUSSION.

The PRESIDENT remarked that this was a paper describing another source of economy in coal mining, which seemed to work satisfactorily.

Mr FAULDS asked if Mr M'Laren would tell them if the ropes he described had many broken wires projecting out, or were they just slightly worn ?

Mr M'LAREN said he had not travelled the incline, but the manager, Mr Burt, was there, and could doubtless answer the question.

Mr BURT said he did not think the ropes contained any broken wires. They were ropes that had been at the colliery for four years.

Mr MENZIES, former manager, said he was under the impression that the ropes had not worked for six months. They were good ropes, but got cut on a pulley and were put aside, and he had no doubt these were the same ropes.

Mr M'LAREN—In that case they were useless for winding, and therefore old ropes.

Mr MENZIES—Most certainly.

Mr FAULDS said he would like to know how long the ropes had been in use, and whether the wheel was malleable iron, cast iron, or steel, grooved or otherwise.

Mr M'LAREN said the wheels were grooved wheels, and similar to the ordinary winding pulley.

Mr GEORGE THOMSON said, as one who had had some experience of steep workings, he thought Mr Burt had great credit for the idea he had brought out. Especially where the inclinations varied, he knew that it was scarcely possible to keep ordinary rails in their position unless they used a heavy rail, which was very expensive. Mr Burt's idea was a new one, and, he thought, a correct one, even though new ropes should require to be applied. He thought that a spike every 4 feet would be better than one every 8 feet. However, they would find that out by experience.

Mr FAULDS said with grooved pulleys he did not suppose it would matter whether it was 4 or 8 feet.

Mr HUGH JOHNSTONE said he thought it was a good idea to have practically continuous rails. This arrangement got over a difficulty which he had experienced when at Niddrie. He had no doubt if their wire rope friends took up the matter they would get over the difficulty of the broken wires by substituting a rope for the purpose.

The PRESIDENT said the use of old wire ropes in this way would depend on whether the price they got for them was more or less than the price of rails.

Mr M'LAREN said the price of old wire rope was 20s per ton.

The PRESIDENT proposed a hearty vote of thanks to Mr M'Laren for his paper, which was agreed to.

The President said, before separating, he had much pleasure in proposing a vote of thanks to the engineers and contractors of the Harbour Tunnel and Central Railway for allowing them that day to inspect their works. A most interesting day had been spent. They were very glad to know that Mr Alexander Simpson, a gentleman so well known in the mining world, was concerned in such important undertakings as the Harbour Tunnel and the Glasgow Subway. The vote was agreed to with applause.

The Mining Institute of Scotland.

1891-92.

HONORARY MEMBERS.

	Year of Entry.
MOORE, RALPH, H.M. Inspector of Mines (Retired), 13 Clairmont Gardens, Glasgow *(Past President)*, -	1878
ROBSON, JOSEPH T., H.M. Inspector of Mines, Swansea *(Past Vice-President)*, - - - -	1878
RONALDSON, JOHN M., H.M. Inspector of Mines, 44 Athole Gardens, Glasgow *(Past President)*, - -	1879
ATKINSON, J. B., H.M. Inspector of Mines, 10 Foremount Terrace, Glasgow *(President)*, - - -	1889

LIFE MEMBERS.

Brown, Walton M., Westmoreland House, Low Fell, Gateshead-on-Tyne, - - - -	1887
Cadell, H. M., Grange, Bo'ness *(Councillor)*, - -	1888
Moore, Robert Thomas, 156 St. Vincent Street, Glasgow, -	1880

ORDINARY MEMBERS.

Subscription £1 1s.

Adam, William, Blantyre Saw Mills, High Blantyre, -	1887
Adams, David, Rockville, North Queensferry, - -	1888

Adamson, James C., Victoria Place, Airdrie, - - 1887
Aitken, Henry, Darroch, Falkirk, - - - - 1878
Allan, Alexander B., 53 Waterloo Street, Glasgow, - 1887
Anderson, George, Ashton Villa, Plains, Airdrie, - - 1880
Anderson, James, Farme Colliery, Rutherglen, - 1880
Angus, John, Muirkirk Iron Works, Muirkirk, - - 1884
Arnott, Thomas, Clyde Cottage, Tollcross *(Councillor)*, - 1879
Atkinson, J. B., 10 Foremount Terrace, Glasgow, - - 1889
Austine, John, Ellerslie, Hamilton, - - - 1878

Baird, Archibald, Park Road, Hamilton, - - - 1879
Baird, Matthew B., Hillside, Hamilton, - - - 1880
Baird, Robert, 141 St. Vincent Street, Glasgow, - - 1879
Ballingal, Neil, Sweet Bank, Markinch, - - - 1891
Barr, William, Over Dalserf Colliery, Larkhall, - - 1879
Barrowman, James, Staneacre, Hamilton *(Secretary)*, - 1879
Baxter, Andrew, 15 Main Street, Coatbridge, - - 1891
Bell, James, San Fermin Mining Company, Portugalete, Bilbao, - - - - - - 1881
Bishop, George A., Royal Bank, Coatbridge, - - 1879
Blackadder, Alexander, Stand Colliery, Airdrie, - - 1880
Bowie, W. T., 40 Kyle Street, Dobbie's Loan, Glasgow, - 1890
Boyd, Adam A., Newcastle Wallsend Coal Company, Wallsend, New South Wales, - - - - 1891
Brown, Adam G., 42 James Watt Street, Glasgow, - 1890
Brown, Thomas M., Lanemark Colliery, New Cumnock, - 1880
Brown, William, Largoward, St. Andrews, - - 1888
Bryson, D. R., 69 Buchanan Street, Glasgow, - - 1889

Buchanan, Col. D. C. R. C., Drumpellier, Coatbridge, - 1881
Cameron, Robert, Balbardie Colliery, Bathgate, - - 1879
Cameron, William J., Finnie Street, Kilmarnock, - 1885
Campbell, Archibald, Redding Collieries, Polmont Station, 1883
Carlow, Charles, The Fife Coal Company, Leven, - 1879
Clark, James, Ormiston Station Colliery, Ormiston, - 1880
Clarke, J. A., Ayr Colliery, Ayr, - - - - 1880
Clark, Robert, Arniston Coliiery, Gorebridge, - - 1883
Colquhoun, James, Tredegar Iron Works, South Wales, - 1882
Cowan, David, Carron Iron Works, Falkirk, - - 1879
Coats, William A., Ferguslie House, Paisley, - - 1884
Craig, Allan, 62 Dundonald Road, Kilmarnock, - - 1890
Cross, James, 445 Eglinton Street, Glasgow, - - 1890
Cuninghame, J. C., 127 St. Vincent Street, Glasgow, - 1879
Cuninghame, John, 127 St. Vincent Street, Glasgow, - 1879

Dalzell, John B., Portland Park, Hamilton, - - 1881
Denniston, R. B., 79 Princes Street, Dunedin, N.Z., - 1886
Dixon, James S., Bent Colliery, Hamilton (*Past President*), 1879
Dunlop, Colin, jun., Quarter Collieries, Hamilton, - 1884
Dunn, David G., Coilsholm, Cambuslang, - - 1882
Dunn, Hugh S., Earlston Villa, Caprington, Kilmarnock, - 1885
Durie, John, Elphingston Colliery, Tranent (*Councillor*), - 1880

Ferguson, David, 124 New City Road, Glasgow, - - 1878
Ferguson, Peter, 19 Royal Exchange Square, Glasgow, - 1885
Forgie, James T., Bothwell Collieries, Bothwell, - - 1878
Forster, T. E., North Jesmond, Newcastle-on-Tyne, - 1890
Frew, Robert, 75 Bath Street, Glasgow, - - - 1879

Galbreath, George, 68 Anderston Quay, Glasgow, - 1890
Galloway, James M., Trabboch Colliery, Drongan, Ayr, - 1890
Galloway, Robert L., 43 Mair Street, Plantation, Glasgow, 1884
Galloway, T. Lindsay, Argyll Colliery, Campbeltown, - 1880
Geddes, G. H., 142 Princes Street, Edinburgh, - - 1881
Gemmel, John, 96 New City Road, Glasgow, - - 1883
Gerald, Henry B., 2 Darnley Street, Pollokshields, - 1890
Gilmour, Allan, Portland Colliery, Kilmarnock, - - 1879
Glen, John, Connell Terrace, Airdrie, - - - 1891
Glen, Robert, Eastfield Colliery, Cambuslang, - - 1881
Gordon, Gavin C., Wishaw Iron Works, Wishaw, - 1878
Grant, A. M., Townholm, Engine Works, Kilmarnock, 1884
Gray, Archibald, Middleton House, Dalry, Ayrshire, - 1883
Gray, Archibald, 55 Eglinton Terrace, Ardrossan, - 1881
Gray, Hugh, Livingston Terrace, Uddingston, - - 1891
Gray, James, Riverside, Old Cumnock, - - - 1890
Gray, John, Spencerfield House, Hamilton, - - 1882
Grierson, Thomas, Glebe Colliery, Douglas, - - 1881

Haggie, P. S. Gateshead-on-Tyne, - - - 1887
Hall, Richard James, Union Gold Mining Company, Moodie's, Transvaal, So. Africa, - - - 1890
Hamilton, Lord, of Dalzell, Motherwell, - - - 1881
Hamilton, Robert, Derwent Villa, Crosshill, Glasgow, - 1887
Harrower, D. K., Bo'ness, - - - - - 1889
Hastie, Jas., Greenfield Colliery, Hamilton (*Vice-President*), 1878
Hill, Laurence, 2 Alfred Terrace, Hillhead, Glasgow, - 1883

Hodson, James, Liverpool Road, St. Helens, Lancashire, - 1880
Hogg, John, Orchard Street, Motherwell, - - - 1878
Hogg, John, Victoria Engine Works, Airdrie, - - 1884
Hood, Archibald, 6 Bute Crescent, Cardiff, - - 1879
Hood, James A., Rosewell, Midlothian, - - - 1887
Hugh, James, Priory Lodge, Blantyre, - - - 1889
Hurll, Mark, Letterick Colliery, High Blantyre, - - 1880
Hyslop, Jonathan, The Cottage, Airdriehouse, Airdrie, - 1881
Hyslop, William, Bank Colliery, New Cumnock, - - 1891

Irvine, C. M'Laren, Fence Colliery, Blackwood, Lesmahagow, - - - - - - - 1880

Jamieson, James Auldjo, 66 Queen Street, Edinburgh, - 1885
Jaquet, John Blockley, 8 Alwyne Square, London, N., - 1891
Johnstone, Hugh, 2 Boswell Terrace, Glasgow, - - 1879
Johnstone, Ronald H., 75 West Nile Street, Glasgow, - 1879

Kesson, Andrew, Clydebank House, Bothwell, - - 1885

Laird, Andrew, 123 St. Vincent Street, Glasgow, - - 1883
Landale, Dr. David, The Binn, Burntisland, - - 1883
Legat, A. S., Carnbroe Iron Works, Coatbridge, - - 1879
Lewin, Henry W., 154 West Regent Street, Glasgow, - 1882
Logan, William, Craigend Colliery, Polmont Station, - 1891

M'Allister, W. S., Kelly Bank, Dollar, - - - 1891
M'Callum, John A., jun., 12 Waterloo Street, Glasgow, - 1887
M'Connell, J. I., Burnfoot, Sanquhar, - - - 1889

M'Creath, George W., 208 St. Vincent Street, Glasgow, - 1879
M'Creath, James, 208 St. Vincent Street, Glasgow, *(Past President)*, - - - - - - 1879
M'Culloch, David, Vulcan Works, Kilmarnock, - - 1885
M'Culloch, John. Loganlea Colliery, West Calder, - 1879
Macdonald, Symington, The Great Kanawha Colliery Co., (Limited), Mount Carbon, West Virginia, U.S.A., - 1880
M'Gill, John, 135 Waterloo Street, Glasgow, - - 1890
Mackay, Andrew, Grangemouth Coal Co., Grangemouth, - 1879
M'Kenzie, William, 7 Inverleith Gardens, Edinburgh, - 1880
M'Killop, James, Slamannan, - - - - 1886
M'Kinnell, William, Clyde Steel and Iron Works Sheffield, 1887
M'Laren, Robert, Bonny, Uddingston *(Councillor)*, - 1882
M'Laren, William, Orchards, Bellshill, - - - 1884
M'Lauchlan, J. D., 19 St. Ninian's Terrace, Morningside Drive, Edinburgh, - - - - - 1882
M'Naughton, James, Egidia, Irvine, - - - 1880
M'Pherson, Gilbert, jun., Stair, Ayrshire, - - - 1887
Miller, W. M., 34 St. Andrew Square, Edinburgh, - 1889
Mitchell, George A., 67 West Nile Street, Glasgow *(Vice-President)* - - - - - - 1881
Moore, F. W., c/o Wormald & Co., Govan, - - 1889
Morison, John, Newbattle Collieries, Dalkeith, - . 1879
Morrison, W. G., 59 St. Vincent Street, Glasgow,- - 1891
Morton, James, Manor Park, Blairhill, Coatbridge, - 1880
Mottram, T. H., 6 Doune Quadrant, Glasgow, - - 1889
Mungall, Henry, Cowdenbeath Collieries, Cowdenbeath, - 1880
Munro, R. D., 141 Buchanan Street, Glasgow, - - 1883
Murray, Robert, Blinkbonny, Bo'ness, - - - 1889

Nasmyth, A. H., Donibristle Colliery, Crossgates, Fife, - 1880

Nasmyth, J. A., Donibristle Colliery, Crossgates, Fife, - 1880
Neilson, George, Summerlee Iron Works, Coatbridge, - 1880
Neilson, John, Summerlee Iron Works, Coatbridge, - 1883
Nimmo, James, 26 Belhaven Terrace, Glasgow, - - 1891
Nimmo, John, 12 St. Giles Street, Edinburgh, - - 1885
Ormiston, A. R., Gartness Coal Coy., 19 Waterloo Street, Glasgow, - - - - - - 1880
Ormiston, James, Mount Vernon, Glasgow, - - 1880

Park, John, Stonelaw Colliery, Rutherglen, - - 1881
Paterson, Rev. T. M. B., Ardenclutha, Hamilton, - - 1888
Paul, James, 7 Shandwick Plack, Edinburgh, - - 1879
Penman, Robert, 377 Dalmarnock Road, Glasgow, - 1887
Pettigrew, Robert, Gartlea House, Airdrie, - - 1881

Rankin, John, jun., Drumgray Colliery, Airdrie, - - 1881
Rankine, David, 75 West Nile Street, Glasgow, - - 1879
Robertson, David, 135 Waterloo Street, Glasgow, - 1880
Robertson, D. A. W., Metropolitan Coal Co., Helensburgh, Illawara Line, New South Wales, - - - 1882
Robertson, Dr J. R. M., Linton, Wilson's Point, Sydney, New South Wales, - - - - - 1886
Robertson, John, jr., 12 St. Vincent Place, Glasgow, - 1891
Ronaldson, J. H., Mount Kembla, Wollongong, N.S.W., - 1879
Rowan, Walter, Dundee Natal Coal Coy., Natal, South Africa, - - - - - - 1890
Roxburgh, Alexander, Alloa Coal Co., Alloa, - - 1880

Roy, William, Lauchope Colliery, Holytown, - - 1879
Russell, Archibald, jun., Avongrange, Hamilton, - - 1882
Russell, George, Summerlee Iron Works, Coatbridge, - 1883
Russell, P. B., Newfield, Hamilton, - - - 1887
Russell, Robert, Coltness Iron Works, Newmains, - 1878
Russell, William F., 175 West George Street, Glasgow, - 1890
Ruthven, The Hon. Walter, Barncluith, Hamilton, - 1890

Scott, William, 20 Drummond Place, Edinburgh, - - 1888
Scoular, George, 5 Vale View, St. Bees, Carnforth, - 1889
Sharp, Robert, Coatbridge, - - - - 1886
Smart, James, Ballgreen, Hamilton (*Vice-President*), - 1879
Smith, Eustace, jun., St. Lawrence Ropery, Newcastle-on-Tyne, - - - - - - 1885
Smith, George W., Port Elizabeth, South Africa, - - 1883
Stafford, Thos. W., 1 Lea Road, Heaton Chapel, Stockport, 1885
Stevenson, Hugh, 21 Clyde Place, Glasgow, - - 1884
Stewart, Alex., Tharsis Mines, Huelva, Spain, - - 1877
Stokes, John, Tollcross Colliery, Tollcross, - - 1890
Strain, Hugh, Cleddans, Easterhouse, - - - 1887

Terris, Henry, Clackmannan Colliery, Clackmannan, - 1880
Tilden-Smith, B., 12 and 14 O'Connell Street, Sydney, - 1890
Thomson, Charles, Calder Iron Works, Coatbridge. - 1879
Thomson, Thomas, 38 New Row, Dunfermline, - - 1884
Thorneycroft, Wallace, Merryton Colliery, Hamilton, (*Councillor*), 1887
Thornton, Peter, Crofthead, Fauldhouse, - - - 1878
Turnbull, A. W., 27 Charlotte Street, Leith, - - 1890

Waddell, Robert, 11 West Regent Street, Glasgow, 1880
Waldie, James F., 53 Waterloo Street, Glasgow, - - 1883
Walker, James, 66 Waterloo Street, Glasgow, - - 1883
Walker, James P., Dalmellington Iron Works, Ayrshire, - 1880
Walker, William H., Springwells Colliery, Airdrie, 1880
Wallace, James, Wester Gartshore Colliery, Kirkintilloch, 1882
Watson, John, Earnock, Hamilton, - - - 1879
Watson, William, Bank Street, Coatbridge, - - 1886
Weir, Alexander, Fireclay Works, Castlecary Station, - 1881
Weir, Thomas D., Ferro, Carril Central de Venezuela, Caracas, Venezuela, - - - - 1884
Wemyss, R. G. E, Wemyss Castle, East Wemyss, - 1890
White, Andrew, Ormiston Hall Colliery, Ormiston, - 1891
Whitelaw, Thomas, Dalzell Colliery, Motherwell, - - 1879
Whitson, A., jr., 104 West George Street, Glasgow, - 1892
Whyte, Robert, 19 Waterloo Street, Glasgow, - - 1887
Wilson, John, Alderston, Mid-Calder, - - - 1881
Wilson, John, 69 Great Clyde Street, Glasgow, - - 1879
Wilson, Robert M., Anchorage, Bothwell, - - - 1889
Wood, James, 40 St. Enoch Square, Glasgow, - - 1880
Wylie, John, Clifton Iron Works, Coatbridge, - - 1883

Yates, Andrew, Grange Colliery, Kilmarnock, - - 1881
Young, John, Baljaffray Colliery, New Kilpatrick, - 1881
Young, Robert, 37 West George Street, Glasgow, - 1882
Young, Robert, Durham Mines, Palmer, Washington State, U.S.A. - - - - - 1888
Young, William, 204 Stobcross Street, Glasgow, - - 1885

ORDINARY MEMBERS.

Subscription, 10s 6d.

Addie, Alexander, 67 Johnston Street, Airdrie, - - 1888
Addie, William, 22 High Street, Blaenavon, Mon., - 1889
Alison, Robert, Leafield, Burnbank Road, Hamilton, - 1890
Allan, John, Calder Iron Works, Coatbridge, - - 1881
Allardice, James, 1 Baillie's Causeway, Hamilton, - 1881
Anderson, George, Ferniegair Colliery, Hamilton, - 1885
Anderson, James, Hassockrigg Colliery, Whitburn, - 1890
Anderson, John, Lochgelly Iron and Coal Co., Lochgelly, 1880
Anderson, Samuel, Watt Street, Rawyards, Airdrie, - 1891
Andrew, Robert, Minas de Aznacollar, Seville, Spain, - 1880
Andrew, William, Lassodie Colliery, Dunfermline, - 1880
Archibald, David, Mossend, West Calder, - - 1888
Archibald, Robert, Carron Works, Carron, - - 1890
Archibald, William, Westburn Colliery, Cambuslang, - 1879

Bain, James, Binniehill Colliery, Slamannan, - - 1889
Baird, Dugald, Leven Collieries, Leven, - - - 1887
Baird, James, Walkinshaw Colliery, Paisley, - - 1890
Barr, John, Rawyards Colliery, Airdrie, - - - 1891
Beaton, Henry, Balbardie Colliery, Bathgate, - - 1889
Beith, Robert, Great Mountain Collieries, Llanelly, South Wales, - - - - - - - 1878
Bell, Alan D., 123 St. Vincent Street, Glasgow, - - 1890
Benson, James R., West Longrigg, Airdrie, - - 1887
Beveridge, David, Kirkness Colliery, Lochgelly, - - 1888
Beveridge, James, Linlithgow Oil Coy., Linlithgow, - 1882

Beveridge, John, Kelty Colliery, Blairadam, - - 1881
Birrell, George, 2 Havelock Terrace, Paisley Rd., Glasgow, 1880
Birrell, William, Donibristle Colliery, Crossgates, - - 1892
Black, Donald, 97 Bath Street, Glasgow, - - - 1891
Blackwood, James, 5 Lamb Street, Hamilton *(Librarian)*, 1887
Blyth, Archibald, Bent Colliery, Hamilton *(Treasurer)*, - 1878
Bowie, Hunter, Lugar Iron Works, Old Cumnock, - 1881
Brand, Mark, Barrhill Cottage, Twechar, Kilsyth, - 1890
Broom, Robert, Argyll Colliery, Drumlemble, Campbeltown, - - - - - - 1891
Brown, George, Longriggend Colliery, Airdrie, - - 1880
Brown, John, Doura, Irvine, - - - - 1888
Brown, John, Bridgeness, Bo'ness, - - - 1891
Brown, Robert, Croftview, East Kilbride, - - - 1883
Brownlie, Archibald, Lassodie Colliery, Dunfermline, - 1883
Bryden, David, Coylton, Ayr, - - - - 1881
Buchanan, John, Palacecraig Colliery, Airdrie, - - 1887
Buntine, Hugh P., Victoria Street, Dunfermline, - - 1891
Burt, Hutchison, Gilmerton Colliery, Gilmerton, - - 1885

Caldwell, James, Pumpherston, Mid-Calder, - - 1887
Campbell, Alexander, Bellfield Colliery, Hurlford, - - 1882
Campbell, Colin, Carron Works, Falkirk, - - - 1891
Campbell, James, Burnside Row, Auchinleck, - - 1889
Campbell, Thomas, Spindleside Colliery, Omoa, Motherwell, - . - - - - 1881
Campbell, Thomas B., 123 St. Vincent Street, Glasgow, - 1890
Carey, William, Grange Colliery, Bo'ness, - - - 1882

Carmichael, Robert, Stand Colliery, Airdrie, - - 1880
Chambers, John, 9 Princes Street, Haywood, Lanark, - 1891
Clark, John, Arniston Colliery, Gorebridge, - - 1888
Clark, John, Dunnikeir Colliery, Kirkcaldy, - - 1891
Clark, William, 208 St. Vincent Street, Glasgow, - - 1883
Clelland, James, Carronhall Colliery, Falkirk, - - 1879
Cochrane, Joseph, Grindstone, Fayette Co., Pa., U.S.A., - 1883
Cochrane, Neil, Glasgow Canadian Phosphates Co. (Ltd.), Buckingham, Ottawa, Canada, - - - 1881
Cowan, James, Cadzow Colliery, Hamilton, - - 1885
Cranston, David, Woodend Colliery, Armadale, - - 1880
Crichton, A. H., Hillside, Linlithgow, - - - 1880
Crockett, John D., Curran House, Dungannon, - - 1880
Crookston, Andrew, Wemyss Colliery, Dysart, Fife, *(Councillor)*, - - - - - 1880
Crookston, Thomas, Meiklehill Colliery, Kirkintilloch, - 1879
Cunninghame, Archibald, Eglinton Iron Co., Dalry, - 1881

Danks, Henry, Green Colliery, Wishaw, - - - 1880
Dewar, Thomas, Glencleland Colliery, Wishaw, - - 1881
Dick, James, Drumsmudden Colliery, Drongan, - - 1889
Donaldson, Robert, Clyde Iron Works, Tollcross, - - 1891
Drinnan, Walter, Macate Mining Coy., Chimbote, Peru, - 1888
Dron, Robert W., 79 West Regent Street, Glasgow, - 1888
Dunn, Robert, Kennedies, Hamilton, - - - 1890
Dunsire, Andrew, Cameron Colliery, Windygates, - 1883

Easton, Alexander, 13 Southbridge Street, Bathgate, - 1883

Easton, Alexander, Hope House, Cleator Moor, Cumberland, - - - - - - 1888
Ellis, William, Blackburn, Bathgate, - - - 1891

Faulds, Alexander, Glen Osmond, Cambuslang (*Councillor*), - - - - - - 1878
Ferguson, Duncan, Lochore and Capeldrae Collieries, Lochgelly, - - - - - - 1880
Ferguson, William, Byrehill Row, Kilwinning, - - 1887
Findlay, Hugh, 78 Hill Street, Kilmarnock, - - 1886
Fisher, Robert, Central Borneo Coy.'s Collieries, Labuan, Borneo, - - - - - - 1888
Fleming, David, Gilbertfield Colliery, Cambuslang, - 1891
Forbes, Alexander, Allanton Colliery, Hamilton, - - 1885
Foster, John W., 24 Silksworth Terrace, New Silksworth, Sunderland, - - - - - 1889
French, John, Millcroft Cottage, Rutherglen Road, Glasgow, 1879
Frew, Henry, 3 Cottage, Quarter, Hamilton, - - 1891
Frew, James, 5 Greenhill, Waterside, Ayr, - - 1887
Frew, James, 75 Bath Street, Glasgow, - - - 1891
Frew, William, Shields Colliery, Motherwell, - - 1887
Friskin, George, Plan Colliery, Crosshouse, - - 1891

Gardner, Hugh, 156 St. Vincent Street, Glasgow, - - 1890
Gavin, James, Udston Colliery, Hamilton, - - 1880
Gibb, Robert, Daldowie Colliery, Broomhouse, - - 1887
Gibson, William K., Craigbank, New Cumnock, - - 1886
Gilchrist, James, St. Helens Colliery, Workington, (*Past Vice-President*), - - - - - 1878

Gilchrist, John, 2 Old Terrace, Muirkirk, - - - 1888
Gillespie, Alexander, Dalmellington Iron Works, Ayr, - 1889
Gilmour, James, Duchray Colliery, Coylton, Ayr, - - 1881
Goodwin, George, Blackhill Colliery, Maryhill, - - 1885
Goodwin, Thomas, Newton Colliery, Newton, - - 1891
Graham, Hugh, Wester Gartshore Colliery, Kirkintilloch,- 1888
Grant, John, Bog and Home Farm Collieries, Larkhall, - 1878
Gray, John, Morningside Colliery, Newmains, - - 1885
Gray, William, Common Cottage, Auchinleck, - - 1880
Gray, William, Carfin Colliery (Dixon's), Motherwell, - 1885
Green, Edwin R., Abbotsford Colliery, Abbotsford, Dunedin, - - - - - - 1891
Green, William, Galston Colliery, Galston, - - 1883
Greig, James, Arden Works, Airdrie, - - 1887

Haddow, John, Benquhat, Dalmellington,- - - 1879
Hamilton, James, 208 St. Vincent Street, Glasgow (*Councillor*), - - - - - - 1883
Hamilton, John, 10 Brown Street, Hamilton, - - 1890
Hamilton, John P., 34 Cadogan Terrace, S.W., London, - 1888
Hamilton, William, Niddrie Cottages, Portobello, - - 1888
Hardie, James, Hopetoun, Winchburgh, - - - 1882
Hart, John, Clyde Iron Works, Tollcross, - - - 1881
Henderson, Andrew, Gartsherrie Colliery, Coatbridge, - 1880
Henderson, William, Levenseat, Fauldhouse, - - 1884
Hendrie, James, 6 West Benhar, Whitburn, - - 1890
Herd, Samuel, Balgonie, Markinch, - - - 1885
Herd, Thomas, Dunnikier Colliery, Kirkcaldy, - - 1880

Hill, James, Dalmellington, - - - - 1880
Hill, William, Old Schoolhouse, Dalmellington, - - 1891
Hillhouse, William, Bonnyton Cottage, Kilmarnock, - 1883
Hogg, James, Kirkhill Colliery, Cambuslang, - - 1887
Hogg, William, Carnmoor Cottage, Forth, Lanark, - 1881
Houston, James, Salsburgh, Holytown, - - - 1891
Howat, John T., Eglinton Iron Works, Kilwinning, - 1883
Howat, Robert M., Bardykes Colliery, Newton, - - 1886
Howat, William, Sundrum, Coylton, Ayr, - - - 1886
Howat, William, Warwickhill Colliery, Kilmaurs,- - 1886
Hunter, A., Alloa Colliery, Alloa, - - - - 1880
Husband, John, Tannochside, Uddingston, - - 1881

Ireland, Thomas, Largoward, St. Andrews, - - 1881

Jackson, Douglas, Coltness Iron Works, Newmains (*Councillor*), - - - - - - 1880
James, William, - - - - - - 1883
Jamieson, Alexander, Balgonie Colliery, Markinch, - 1878
Jamieson, Thomas J., Oakbank, Mid-Calder, - - 1891
Jamieson, William, Mining Office, Broxburn, - - 1879
Jeffrey, William, Ladylands Colliery, Shotts, - - 1888
Johnstone, William, Lassodie Colliery, Dunfermline, - 1888

Keirs, John, Garrochhill, Coylton, Ayr, - - - 1891
Kelso, John, Springfield Place, High Blantyre, - - 1891
Kennedy, Alexander, Broxburn Oil Works, Broxburn, - 1882
Kennedy, William, Whiteside Lane Cottage, Bathgate, - 1888
Kerr, Archibald, Crowhills, Lesmahagow, - - - 1881

Kerr, George, South Lodge, Rawyards, - - - 1891
King, Henry, Darngavil Colliery, Airdrie, - - 1889
Kirkby, Richard, Kirklands, Methil, Fifeshire, - - 1891
Kirkwood, Wm. A., Clydeview, Larkhall, - - 1890
Knox, George, 95 Bannatyne Place, Bent, Hamilton, - 1891
Knox, James, Tranent Collieries, Tranent, - - 1880

Laidlaw, Thomas, Luggiebank, Bargeddie, - - 1891
Lander, Francis, Holmes Cottages, Uphall, - - 1885
Leggate, Robert, Shawsrigg Colliery, Larkhall, - - 1890
Lithgow, Thomas, Langbyres Colliery, Omoa, Motherwell, 1882
Little, William, Gilbertfield Colliery, Cambuslang, - 1890
Livingstone, Archibald, Millburn Cottage, Deans, Bathgate, 1880
Love, Isaac, Shotts Iron Works, Shotts, - - - 1891
Love, John, Shottstown, Penicuik, - - - 1878
Love, John, Portland Iron Works, Hurlford, - - 1882
Lynn, William C, School Terrace, West Calder, - - 1891
M'Bride, John, Glengowan, Larkhall, - - - 1889
M'Cann, Edward, 9 Westpans, Musselburgh, - - 1888
M'Culloch, John, Jawcraig Colliery, Slamannan, - - 1888
M'Culloch, William, Linkieburn House, Muirkirk, - 1881
M'Donald, John, Greenhill Colliery, Holytown, - - 1880
M'Donald, John, jun., Greenhill Colliery, Holytown, - 1890
M'Farlane, Nigel, Kirkton, High Blantyre, - - 1890
M'Farlane, Walter, Mossvale Cottage, Chryston, - - 1882
M Gee, John, Tillicoultry Colliery, Tillicoultry, - - 1880
M'Gill, James, Burntisland Oil Works, Burntisland, - 1887
M'Kay, James, Roughrigg Colliery, Airdrie, - - 1880

M'Neil, James, Glencleland House, Wishaw, - - 1878
M'Phail, James, North Motherwell Colliery, Motherwell, - 1884
M'Pherson, Gilbert, Holmes Colliery, Galston, - - 1881

Malcolm, James, Haywood Colliery, Lanark, - - 1879
Marshall, John, Seymour House, Stevenston, Ayrshire, - 1888
Marshall, William, West Benhar, Harthill, - - 1891
Martin, Daniel, Clydeside, Broomhouse, - - - 1891
Martin, Robert, Niddrie Collieries, Portobello, - - 1879
Martin, T. P., Mealsgate, Carlisle, - - - 1891
Martin, William, Douglas Park, Colliery, Bellshill, - 1881
Maxwell, James, Limerigg Cottage, Slamannan, - - 1891
Maxwell, Peter, Shieldhill Colliery, Falkirk, - - 1891
Meikle, Hugh, Ayr Colliery, Annbank, - - - 1890
Menzies, John, Auchinraith Colliery, Blantyre, - - 1889
Middleton, George, Neilston Colliery, Kilsyth, - - 1886
Miller, John, Clydesdale Colliery, Wishaw, - - 1892
Miller, John D., Rosehall Colliery, Coatbridge, - - 1888
Miller, Robert, Eastfield Cottage, Harthill, - - 1890
Miller, Robert, Newhouse, Holytown, - - - 1891
Miller, William, Equitable Coal Coy., Barakar, E.I. Railway, Bengal, - - - - - 1891
Milligan, Peter, Cleland, - - - - - 1884
Moffat, James, Niddrie Cottages, Portobello, - - 1888
Moodie, Thomas, Earnock Colliery, Hamilton, - - 1881
Moore, Robert, Pumpherston, Mid Calder, - - 1888
Morrison, George, Hareleeshill Cottage, Larkhall, - 1891
Morton, John, 8 Garden Street, Galston, - - - 1880

Morton, R. M., Ansonhill House, Crossgates, Fife, - 1879
Morton, William S., Skaterigg Colliery, Maryhill, - 1884
Mowat, David M., Summerlee Ironworks, Coatbridge, (*Councillor*), - - - - - 1886
Muir, Robert, Bog Colliery, Larkhall, - - - 1887
Muir, Robert, Hill of Beath Colliery, Crossgates, - - 1890
Muir, Walter, Ferniegair Colliery, Hamilton, - - 1891
Muir, W. W., Halbeath Colliery, Dunfermline, - - 1878
Munro, James, Quarter Collieries, Hamilton, - - 1879
Munro, Neil, Twechar, Kilsyth, - - - - 1886
Murray, James, Merryton Colliery, Hamilton, - - 1891

Napier, James, 16 Whitevale Street, Glasgow, - - 1890
Nasmyth, A., Donibristle Colliery, Crossgates, Fife, - 1880
Neilson, Benjamin, Prestongrange Coal Coy., Prestonpans, 1880
Ness, Henry, Muircockhall Colliery, Dunfermline, - 1880
Nicol, Andrew, 12 Dixon Street, Hamilton, - - 1892
Nimmo, Thomas, Kinneil Colliery, Bo'ness, - - 1879
Nisbet, Andrew, Carfin Colliery, Motherwell, - - 1884
Nisbet, Henry, Devon Colliery, Alloa, - - - 1888
Nivison, John, Dykehead Colliery, Larkhall, - - 1886

Orr, Thomas, Bredisholm Colliery, Uddingston, - - 1881

Park, James, Wellhouse, Rutherglen, - - - 1883
Park, Joseph, Allanshaw Colliery, Hamilton, - - 1878
Parker, William, Woodville Cottages, Armadale, - - 1887
Paterson, Hugh, Braidhurst Colliery, Motherwell, - 1881
Paterson, Peter, 1 Cambusnethan Street, Wishaw, - 1889

Paterson, Thomas, 208 St. Vincent Street, Glasgow, - 1883
Paul, James, Loanhead, Colliery, Loanhead, - - 1881
Pearson, Andrew, Ross Colliery, Hamilton, - - 1889
Pearson, Hugh, Caldercruix, - - - - 1892
Penman, James, Wellsgreen Colliery, Windygates, - 1883
Penn, James, Crosby and Gilcruix Collieries, Maryport, - 1891
Prentice, William P., Dalmeny Works, Dalmeny, - - 1889

Plunket, Edmund, Bishopbriggs, Glasgow, - - 1889
Potts, Samuel, Greenfield Foundry, Hamilton, - - 1888
Prentice, Jas., Stanrigg Collieries, Airdrie (*Vice-President*), 1881
Prentice, Thomas, Brisdanehill, West Calder, - - 1879

Rankin, George, Victoria Works, Nitshill, Hurlet, - 1889
Rennie, Wilson, Gateside Colliery, Cambuslang, - - 1890
Riddell, William, Aitken's Buildings, Rawyards, - - 1891
Roberts, James, Gilbertfield Colliery, Cambuslang, - 1889
Robertson, Alexander, - - - - - 1880
Robertson, Archibald, Bathville Colliery, Armadale, - 1880
Robertson, David, Lanemark Colliery, New Cumnock, - 1881
Robertson, George, 48 Jubilee Buildings, Bothwell, - 1890
Robertson, John, Lanemark Colliery, New Cumnock, - 1880
Robertson, Richard, Rhins House, Baillieston, - - 1888
Robertson, Robert, jun., Sydney Mines, Cape Breton, Nova Scotia, - - - - - 1891
Robson, Robt., Victoria Mines, Cape Breton, Nova Scotia, 1882
Rodger, William, Fergushill Colliery, Irvine, - - 1888
Rome, J. E., Arniston Colliery, Gorebridge, - - 1886
Rorison, John, Springhill Colliery, Kilmarnock, - - 1883

Ross, John, Dalquharran Colliery, Maybole, - - 1890
Ross, Michael, Dechmont Colliery, Newton (*Councillor*), - 1878
Rowan, Donald, Harthill, Whitburn, - - - 1884
Rowan, Henry, Hill of Beath Colliery, Crossgates, - 1881
Roy, Henry, Linrig Colliery, Holytown, - - - 1889
Roy, John, Fireclay Works, Castlecary Station, - - 1888
Roy, Robert P., Mount Carron, Larbert, - - - 1889
Russell, Andrew, 97 Melville Drive, Motherwell, - - 1887
Russell, Charles, Blairhall Colliery, East Grange, Dunfermline, - - - - - - - 1886
Russell, Joseph, Daldowie Colliery, Broomhouse, - - 1889
Russell, W. S., Newliston Works, Kirkliston, - - 1880

Salmond, James, Barncluith Colliery, Hamilton, - - 1888
Scott, John, Calder Iron Works, Coatbridge, - - 1879
Scoular, Robert, Bank Colliery, New Cumnock, - - 1891
Seggie, Robert, Bardykes Colliery, Newton, - - 1890
Semple, William, Crosby and Gilcruix Collieries, Maryport, - - - - - - - 1891
Sharpe, George, Shotts Iron Works, Shotts, - - 1881
Shore, Thomas, Walton Park Colliery, Fairfield, Dunedin, 1891
Shore, William M., Kaitangata, Dunedin, New Zealand, - 1886
Simmons, John, Bardykes Colliery, Newton, - - 1890
Simpson, Alexander, Knockterra Cottage, Cumnock, - 1889
Simpson, Dundas, Ellismuir Colliery, Baillieston, - - 1879
Simpson, Robert, Newbattle Colliery, Dalkeith, - - 1888
Smellie, Archibald, 34 West Benhar, Whitburn, - - 1891
Smith, David, Dalmellington, Iron Works, Ayr (*Councillor*), 1885

Smith, David L., Barkip Works, Dalry, - - - 1888
Smith, Hamilton, Cadzow Colliery, Hamilton, - - 1878
Smith, James, Hallhill Colliery, Baillieston, - - 1881
Smith, John, Cannock Lodge Colliery, Bloxwich, Staffordshire, - - - - - - 1878
Smith, John, Rosehall Colliery, Coatbridge, - - 1880
Sneddon, James B., Oakbank Colliery, Mid Calder, - 1886
Speir, William, Balgonie Colliery, Thornton, - - 1888
Speirs, Adam, Westmains Cottage, Bathgate, - - 1888
Speirs, William, Bridgeness Colliery, Bo'ness, - - 1891
Stark, Archibald, Pilgrim's Rest, Leydenberg District, Transvaal, So. Africa, - - - - 1888
Steel, Alexander, New Cumnock, - - - - 1891
Steele, John, Ellenborough Place, Maryport, - - 1891
Stevenson, Dugald, Ellismuir Colliery, Baillieston, - 1891
Stevenson, Henry, Portland Collieries, Alfreton, Derbyshire, - - - - - - 1890
Stevenson, Wm., Raebog Cottage, Airdrie, - - 1888
Stewart, Alexander, West Benhar, Whitburn, - - 1892
Stewart, Daniel, 71 West Benhar, Whitburn, - - 1892
Stewart, H., Muiravonside Colliery, Slamannan, - - 1881
Stirling, John, Bonnybridge, - - - - 1880
Stoker, Thomas, E., 16 Institute Terrace, Peases West, Crook, R.S.D., - - - - - 1890
Strachan, Peter, 94 Aitchieson Street, Airdrie, - - 1891

Telfer, Henry, Overtown Colliery, Wishaw, - - 1878
Tennant, Alexander, 47 South Bridge Street, Bathgate, - 1891

Tennant, George, Castlehill Colliery, Carluke, - - 1891
Thom, Archibald, Moresby Coal Coy., Whitehaven, - 1881
Thom, James, Herräng Hafvers, Stockholms, Zän Sweden, 1887
Thomson, A. M'D., Raith Colliery, Cowdenbeath, - 1880
Thomson, George, Fauldhouse Works, Fauldhouse, - 1884
Thomson, James, Ross Street, Dunfermline, - - 1883
Thomson, John, Lumphinnans Colliery, Cowdenbeath, - 1888
Thomson, Richard, Queen's Buildings, Lenzie, - - 1878
Thomson, Thomas, Eddlewood Colliery, Hamilton, - 1879
Todd, John, 156 St. Vincent Street, Glasgow, - - 1891
Twaddle, William, Ferniegair, Hamilton, - - - 1878

Vallance, William, Horsleyhead Cottage, Overtown, - 1891

Waddell, Alexander W., 37 Burnbank Gardens, Glasgow, 1883
Waldie, A. B., 25 Douglas Crescent, Edinburgh, - - 1885
Walker, David, jun., Bathville Collieries, Armadale, - 1884
Walker, George B., Tankersley Grange, Barnsley, - 1887
Walker, John W., Woodmuir Colliery, West Calder, - 1889
Walker, Robert, Bog Colliery, Larkhall, - - - 1881
Walker, Thomas H., Drumpellier Colliery, Coatbridge, - 1891
Walker, William, Cadzow Colliery, Hamilton, - - 1887
Walker, William, Rigside Colliery, Douglas, - - 1880
Wallace, Robert, Fairhill Colliery, Hamilton, - - 1891
Wardlaw, John, Stanley Cottage, Newmains, - - 1878
Wardlaw, Robert, Crofthead Colliery, Fauldhouse, - 1883
Wardrope, James, Fordell Colliery, Crossgates, Fife, - 1887
Watson, Andrew, Cadzow Colliery, Hamilton, - - 1890
Watt, Robert, Brownlee Colliery, Law, - - - 1887

Watt, Robert, Candie House, Avonbridge, Falkirk, - 1890
Webster, David, Burdiehouse Limeworks, Edinburgh, - 1880
Welsh, William, Craigmark, Dalmellington, - - 1891
White, James, Westrigg Colliery, Armadale, - - 1885
White, William, Burntbroom Colliery, Broomhouse, - 1890
Whiteside, John, Ballochmyle Colliery, Auchinleck, - 1888
Whitton, Joseph, 93 Flemington, Cambuslang, - - 1891
Wilkie, William, South Arnloss Colliery, Slamannan, - 1885
Williams, W. H., Shag Point Colliery, Shag Point, Otago, N.Z., - - - - - - 1888
Williamson, Alexander, Deans Works, Bathgate, - - 1891
Williamson, James, 14 Lorne Terrace, Maryhill, - - 1880
Williamson, William, 41 Campbell Street, Hamilton, - 1886
Wilson, Robert, Longrigg Colliery, Slamannan, - - 1880
Wilson, Robert, Kirkwood Colliery, Coatbridge, - - 1880
Wingate, John B., 208 St. Vincent Street, Glasgow, - 1890
Wood, Thomas, Addiewell Works, West Calder, - - 1887
Wood, Walter K., Broomhouse Colliery, Broomhouse, - 1891
Woodburn, J. Allan, Langloan Iron Works, Coatbridge, - 1891
Wylie, James, Townhill Colliery, Dunfermline, - - 1880
Wyper, James, Townlands Colliery, Hamilton, - - 1880

INDEX TO NOTES ON PAPERS IN TRANSACTIONS OF KINDRED SOCIETIES.

	Page
Atmosphere of mines at Kolscheid, Testing the	52
Bending stress, On the resistance of ropes to	51
Boring machines, On hand-power diamond	30
Braye tunnel, The shafts of the	29
Building in earthquake countries,	54
Capell fan at Berge-borbeck, On a	48
Car wheels, Note on the friction of mine	44
China, Kinder on railways and collieries of North	46
Coal mining in Warora, Central Provinces, East India	37
Coal-washing machine, A new form of	36
Compound winding engine at the Skalley Colliery, Saarbrücken, Experiments with a	27
Diamond-boring machines, On hand-power.	30
Earthquake Countries, Building in	54
Electrical transmission of power at Bourganeuf,	56
Electricity and haulage	52
Embankments in soft soils, The construction of railway	30
Explosives in presence of firedamp, Employment of	53
Fan at Berge-borbeck, On a Capell	48
Fan, Notes on the medium	44
Friction of mine car wheels	44
Geothermometric measurements in the bore-holes at Schladebach and Sennewitz	31
Haulage, Electricity and	52
Haulage trials, Oriolle system, Rope	28
Inspectors of mines' reports, Extracts from	5
Overwinding and its prevention	43
Preservative agents on mine timber, On the effect of	47
Prussia during the year 1888, Mining progress in	32
Railway embankments in soft soils	30
Railway, The Bürgenstock wire-rope	50
Railway, The sliding	49
Resistance of ropes to bending stress, On the	51

Shaft-surveying at the Przibram Mines 47
Sliding railway, The 49
Somersetshire coalfield, The 33

Timber, On the effect of preservative agents on mine 47
The tunnel of Braye en Laonnois 26
Tunnel, The shafts of the Braye 29

Velocity of bodies of different specific gravity falling in water 52
Ventilation in driving levels at Dudweiler, On machine 45

Warora, Central Provinces, East India, Coal mining in 37
Washing machine, A new form of coal 36
Wheels, Friction of mine car 44
Winding engine at the Skalley Colliery, Saarbrücken, Experiments with a compound 27
Wire-rope railway, The Bürgenstock 50

NOTES ON PAPERS IN TRANSACTIONS OF KINDRED SOCIETIES, &c.

EXTRACTS FROM REPORTS OF THE INSPECTORS OF MINES FOR 1890.

Mr J. B. ATKINSON, East Scotland District.

Explosions of fire-damp.—Commenting on an accident at Devon Colliery, Mr Atkinson thinks it is a defect that the general or special rules do not provide for the examination of a temporarily disused place, even if not to be occupied by a workman.

An explosion at Snab Pit, Kinneil Colliery, causing the loss of two lives, appears to have been caused by gas existing at a high pressure in the abandoned workings in the Main Coal seam. As the head of water in the shaft was lessened by the chesting, the tension of the gas overcame the pressure due to the head of water, and it escaped suddenly into the shaft, and ascended through the water. Outbursts of gas under similar conditions have been known to occur, and are sometimes called "water blasts." At Kinneil, after the explosion, gas came off suddenly on other occasions; it was observed after such an eruption that the level of the water in the shaft had fallen considerably.

Falls of roof and sides.—During the year 1890, of the persons employed underground in mines under the Coal Mines Regulation Act in the United Kingdom, 1 in every 1,168 was killed by falls of roof and side; in this district during the same period 1 in every 1,202 was so killed; in 1889 the figures were 1 in 997 and 1 in 1,613 respectively. It thus appears that while in respect of loss of life from falls of roof and side, East Scotland compares in both years favourably with the United Kingdom, yet the latter is improving while East Scotland is going back.

Mr J. M. RONALDSON, West Scotland District.

Output of minerals.—It will thus be seen that there has been a decrease, on the average, of an output of 12 tons per person employed since the previous year. Seeing that there was a considerable advance in workmen's wages, this decrease of output per person employed illustrates the mining rule that the work performed by miners is inversely proportional to the rate of wages for a given output. The average output per person employed for the whole kingdom was 317 tons last year as against 336 tons the preceding year, it having required the enormous addition of 50,000 persons to produce the 5,000,000 tons of increase in output.

Explosions of fire-damp.—These accidents are not decreasing in number in the district as might have been expected in consequence of the coming into operation of the new General and Special Rules. Many were due, as in former years, to the violation by officials or workmen of the rules designed to prevent explosions, and there were no fewer than 17 prosecutions during the year for failure to observe the rules dealing with fire-damp. It is, therefore, obvious that there is still much to be desired on the part of those responsible for seeing that these rules, on the observance of which the safety of all concerned so much depends, are strictly enforced.

Falls of roof and side.—I have stated before, and can only repeat it, that the present General and Special Rules do not cope with this subject any better than the General and Special Rules which preceded them, and that if the number of these preventable accidents is to be materially reduced throughout the kingdom, a definite system of compulsory propping and spragging must be adopted. Many of the miners and their advisers, with the best intentions, are calling for an increase in the number of inspectors of mines as a preventive against accidents, but no amount of inspection would prevent many of the accidents which take place.

Miscellaneous accidents underground.—Commenting on the underground fire at Dalzell Colliery (in which the manager, Mr Drinnan, and Mr Weir, manager of an adjoining colliery, lost their lives), Mr Ronaldson writes:—It is supposed that it was Mr Drinnan's intention to reach if possible the stone mine through which the haulage road passes from the Ell to the Main coal, where it had been proposed to put in a stopping, but as about 8 a.m., or six hours before his last entrance to the Main coal, the smoke and fumes from the fire were found coming up this mine by the men engaged in taking the horses up the shaft A, he might have known that it would hardly be possible again to reach that point, and still less possible to put in a stopping unless he first restored the ventilation. From the fact that the lamps continued to burn brightly even when the men were overcome, it is probable that carbonic oxide gas was present, and was the cause of this unfortunate fatality. It is stated that Mr Drinnan and some of those present had discussed the properties of this poisonous gas before going down the shaft B, and as they were aware of these, and as, owing to the

mouth of the upcast being closed, the imperfect combustion was likely to produce carbonic oxide gas, it is difficult to imagine what could have induced the deceased and Mr Wilson to enter the workings in the circumstances. No useful purpose could thereby have been effected, and there was no life at stake which might have been saved except the horses in the Splint coal, and these they could not possibly reach. I have been unable to ascertain how the fire originated.

Accidents above ground.—This boiler explosion—No. 16 in Schedule 1—took place at Glorat mine, of which the deceased Mr Gilbert Pitcairn was the managing partner. The boiler was of the ordinary egg-ended type, 15 feet long by 3½ feet diameter, the plates having been originally ⅜ inch thick. I was informed that when the pit was sunk 18 years ago, the boiler was put in then, but that it had been in use before. The working pressure was said to be 40 lbs. per square inch. It appears that on the morning of the 29th March a longitudinal rupture of one of the bottom plates took place. This rupture was 18 or 20 inches in length, and through it the boiler emptied itself of water in two or three minutes, and put out the fire. It seems that the deceased then got two pieces of hoop iron, 35 inches long by 3 inches wide by ⅛ inch thick, and after drilling three bolt holes along the line of rupture in the boiler and corresponding holes through the pieces of iron, they bolted them together, one on each side of the boiler shell, with a piece of sheet indiarubber between the inside piece of iron and the boiler. Water was then pumped into the boiler to a depth of 10 inches, and as it still ran out at the fracture, the engineman went inside and tightened up the bolts, which, it was said, had the effect of stopping the leakage. Water was then pumped in until it was within 6 inches of the manhole, which was then put on. Next morning steam was raised to pump water out of the pit, and it appears that the deceased were on the top of the boiler, and the injured man was in the stockhole, when the boiler exploded. The back end with the first ring of plates was projected backwards 210 yards to the north, a portion of the front was blown 150 yards to the south, and the remainder 110 yards to the east. The owner's body was found 50 yards and the engineman's 60 yards distant, while the injured man was found among the débris where the stokehole had been.

The plate where the rupture had taken place the day before the explosion was only from $\frac{1}{32}$ to $\frac{1}{16}$ inch thick at that point, and in many other parts the plate and the one adjoining it was no more than $\frac{1}{32}$ inch thick. Other parts of the shell were very much "pitted" and eaten away by corrosion. It appears that this boiler, which was the only one at the pit, had leaked badly at various parts, but so far as I could ascertain, no examination of it had ever been made by a competent person, and the leakages were stopped as best could be by caulking the seams, putting in horse's dung, and fitting in bolts tightly screwed up where there were bad rivets. At the time of the explosion the deceased were inserting a wire into the small pipes leading from the boiler to the gauge glass. I do not think that their

clumsy attempt to close the fracture the previous day could possibly be successful, and I am of opinion that during the night the water had nearly all run out of the boiler. There can be no doubt that the boiler gave way first along the line of the fracture referred to, and the only wonder is that it had not exploded before in its weakened condition.

This accident showed either ignorance or foolhardiness on the part of the deceased to an extent that is hardly credible. Both men could not fail to know that the boiler was eaten away by corrosion until it was no thicker than a wafer, seeing that they actually drilled holes through the thinnest part. It is difficult to believe that they could be aware of the risk they ran, or that practical men would endeavour to repair the leakage in the manner they did. It appears, however, that the owners were giving up the colliery in a few days, and I am of opinion that the deceased owner must have known to some extent the risk he was running, but thought that the boiler would last until they stopped. As to the engineman, he had signed the report book for over two years, including the day previous to the explosion, but reported nothing wrong with the boiler. This being the case, his reports are untrustworthy, and are no index of his knowledge as to its real state.

Mr THOMAS BELL, Durham District.

THE deaths from falls of roof appear to me to be excessive, considering that in this district all the timbering is done by deputies, who are selected for their skill and knowledge in this class of work from among the most intelligent of the workmen; and under the Special Rules "each deputy "is held to have the responsible charge of the portion of the mine assigned "to him, under the direction of the overman or back overman." He is also "held responsible for having ready and putting into or near to every "working place under his charge a sufficient quantity of suitable timber, "brattice, sprags, and other materials, and (except as provided in Rule "103) for setting sufficient timber to afford the greatest possible safety "to the workmen employed, and he shall report any deficiency of timber, "brattice, sprags, or other materials to the overman or back overman." The Rule 103 alluded to specifies that "should the working place of any "man or boy become unsafe, from any cause, he shall discontinue working "in it, and immediately send or go for the deputy; but if the danger "arises from want of timber being set, then in the absence of the deputy, "there being sufficient timber of proper lengths in or near the place, he "shall set it in order to keep himself safe, or shall cease to work and retire "therefrom, and report the same to the deputy or other official, and in all "cases where necessary he shall sprag his jud."

Yet in face of these stringent regulations no less than 56·75 per cent. of the whole of the deaths in the district took place from falls during the

past year, many of them, I regret to say, from sheer carelessness and disobedience to orders.

. . . . . .

If the fines for offending against the Mines Regulation Act and Special Rules are to be paid by anyone except the person so offending, there is an end to all discipline in our mines, and I am told it has already been said by some boys who have committed offences in this mine : " We do not care if you do summons us ; the Union will pay the fines." It is of the utmost importance that discipline should be maintained, and I trust I shall not have another occasion of suspecting such an improper action having been taken by anyone. The men themselves, I am sure, will readily see that accidents are avoided by good management, and that there cannot be any such thing without proper discipline being maintained. All the Acts Parliament could ever pass would be of no utility if such proceedings were always taken, and I hope everyone in future will do all he can to carry out the one now in force.

. . . . . .

I fear many deaths are included in the foregoing list every year which ought properly not to be ; it is a too frequent occurrence in cases of sudden or unexpected death for the relatives to endeavour, and they often succeed, in obtaining a sum of money allowed out of the Miners' Permanent Relief Fund, by alleging that deceased should have said before death that he received a blow, or a sprain while at work in the mine, but such accident is not as a rule reported to the officials, and as the sympathy of coroners' juries are generally, and perhaps naturally, with the relatives, the funds of the society are thus often imposed upon, and the list of deaths made to appear larger than, in reality, it should be ; but I am afraid a remedy will be difficult to find.

. . . . . .

Notwithstanding this decision I still think it impossible the Legislature ever contemplated that by the appointment of a manager and the simple posting up a code of rules that the owner should be allowed to escape all further responsibility for the risks of his undertaking ; if this is so, and if it should now be acted upon by colliery owners generally, it will be a sorry business for the workmen.

Mr FRANK N. WARDELL, Yorkshire and Lincolnshire District.

It is satisfactory to be again able to state that this year, as in 1889, two deaths only, the result of one accident, have to be recorded as the consequence of explosion of gas. To the maintenance of strict discipline, combined with vigilant care and attention to rules, must be attributed in a great measure so small a death-rate from this dreaded cause of disaster, for over a large area of this district the mines are very extensive, of a fiery nature, and in many cases dry and dusty ; and the elements of this frequently hidden danger are no doubt too often present, merely awaiting

a relaxation of this discipline, or a disregard to some rule, to become, when brought in contact with a naked light, the means of increasing the list of mortality under this head. It must be borne in mind, also, that in conjunction with good discipline and observance of rules, efficient and sufficient ventilation is an absolutely necessary adjunct in order to reduce accidents from explosion to a minimum. There has been undoubtedly a considerable and progressive improvement in the ventilation, especially of the more extensive and fiery mines, during recent years, and unless this is kept up and mining operations guided with the knowledge produced by practical experience coupled with science, accidents from this and, indeed, any other cause, are certain to occur. An additional difficulty in dealing with and guarding against explosions is created in certain portions of this district by a tendency the gas has to escape, or be expelled in sudden "blowers," or "outbursts," which suddenly and without warning render the air currents inflammable, and which makes it desirable, in my opinion, to adopt in all cases, where practicable, mechanical in lieu of furnace ventilation.

The number of deaths from falls of roof and sides exhibits a total of 48 compared with 56 in the previous year, being a reduction of 8. The record in this column is the most serious of all, for in nearly every single year, and certainly in any term of years, a much higher death-rate will be found than even that under explosions of gas. Although the loss of life under this head is lower in 1890, still it forms a percentage of 47 of the total mortality in the district. In 1889 this percentage was nearly 53, and in 1888 about 60. Abundant and skilful propping is, as I have so often pointed out, imperatively necessary, and it must be evident that while deputies and officials can in no case relieve themselves from responsibility so far as exercising care and supervision is concerned, the safety of the working places must depend to a considerable extent on the watchful care and judgment of the workmen actually employed there, and who are best able to note and protect themselves against any change in the condition of roof or face which may arise, provided also, of course, they have, as it is necessary they should, the means to do so in the form of a supply, ready at hand, of suitable props.

Mr JOSEPH DICKINSON, Manchester and Ireland District.

Washing Machines.—There are in North and East Lancashire 13 large coal-washing machines, most of which are new, and many collieries with ovens where coal is coked, but not any such machines nor coke ovens at the Irish collieries.

Accidents—Hours of Occurrence.—The hours of the day and night during which the whole of the 192 fatal and non-fatal accidents occurred below ground and above ground at all the mines of the district, were :—

A.M.—From twelve to one o'clock 2, one to two 2, two to three 1, three to four 1, four to five 1, five to six 2, six to seven 7, seven to eight 10, eight to nine 18, nine to ten 17, ten to eleven 18, eleven to twelve 24.

P.M.—Noon to one o'clock 15, one to two 11, two to three 19, three to four 17, four to five 5, five to six 4, six to seven 3, seven to eight 2, eight to nine 5, nine to ten 3, ten to eleven 3, eleven to twelve 2.

From the list giving the time it appears that here, where work begins generally about 6 a.m., the accidents increase up to 9 o'clock, when a lull occurs till 11, caused perhaps by cessation of work for meals; then, between 11 and 12 noon, when all is generally in full swing, they attain the maximum, which is followed by another lull, caused, perhaps, by stoppages for dinner, the time for which varies; after which, between 2 and 4 p.m., there is again an increase, followed by a rapid diminution.

Outbursts of Soft Coal and Gas.—The outbursts of soft coal and gas which have been taking place during the last six years in the Nook Pit of the Broad Oak Colliery, Ashton-under-Lyne, require special notice. The shafts were sunk about the year 1870, the deeper one being 296 yards to the Royley Seam, with the strata dipping at the rate of one in two, the good coal being only about two feet in thickness, but with soft coal about half a yard in thickness lying above, which has been a source of trouble since the mine was commenced.

The coal on the rise of the shafts was first worked, and then that on the dip was begun, nearly all the new drivings giving off large quantities of fire-damp. The soft coal being of little, if any, value as fuel, and being the principal material available for packing, has been stowed away in the goaves, and as it contains nodules of iron pyrites and other combinations of sulphur, nearly all the packs have been found to heat, and some to ignite, which has occasioned various methods of working to be tried, with the result up to the present time of finding that in order to deal with the fires it is best to have the new drivings made about ten or twelve yards in width, the roadway being in the middle, with packs at each side formed in blocks of four or five yards square, with room sufficient between that they can be gone round and watched, and if fire occurs it can be readily cut into and, if needed, cleared out; also, that in drawing back the pillars, roadways have to be made and kept open into the goaves or old workings for about three months after the coal has been worked, after which time heating generally ceases.

The workings continued in this way without any other than the before-mentioned difficulties being met with until the year 1885, when, in the month of May, in No. 4 north level on the dip, at 160 yards out from the engine-brow, where the depth below the surface was 498 yards, the bed of soft coal became suddenly forced out from the face of the level or about 16 feet beyond.

After this, in October, when the level was 280 yards from the engine-

brow, a much larger outburst occurred, which caused the working to be stopped for a time, and thoughts were entertained of abandoning the mine.

Early after they commenced, boring in advance was thought to be the likeliest preventive by letting off pressure of gas, and that has been tried. But the outbursts have occurred both with and without bore-holes, one outburst being where a thrill was being commenced between two bore-holes, and another where there was a level on the rise, by which under ordinary circumstances the pressure of gas should have got vent, and yet the outburst was about three yards in length and extended to within about one yard of the level above.

From some of the bore-holes gas issues, but not from all, and occasionally when men are holing or mining with the pick in the soft coal the issue of gas is such that in upbrow places the brattice has to be kept within two or three feet of the face to clear it away by ventilation, and even on levels the safety-lamps have sometimes to be kept out of the holing, gas being so abundant in the coal that it will come out quickly.

It might be supposed that slower driving, by working only one shift, would allow the gas time to drain. But the most recent outburst, that 13 feet in length, on March 9, occurred on Monday, after the place had been standing since noon on the preceding Saturday, with a bore-hole 8 feet 2 inches in advance of the leading cut, and it swept out what remained of the bore-hole. From this borehole it was noticed that gas did not issue.

When gas does not issue from the bore-holes, it is open to suspicion that in consequence of the sulphur combinations in the soft coal, which are known to produce spontaneous combustion, the bore-holes, instead of doing good by letting off the pressure of gas, may, by the admission of air, cause absorption of oxygen, and thus by expansion increase the pressure, and do more harm than good.

Depth and Temperature of Mines.—The lists and details of collieries show that the deepest shafts in this district, and of, I think, any part of the kingdom, are those at Ashton Moss Colliery, Ashton-under-Lyne, where the deeper shaft is 2,880 feet. Greater depths are attained in this and another colliery in the district by means of downbrow working; the present depth at the bottom of the engine-brows being, in Ashton Moss Colliery, 3,105 feet, and in Pendleton Colliery 3,000 feet.

The temperatures in these collieries, as taken recently by myself with a standard thermometer tested at Kew, show that in the highest temperatures a considerable cooling property ensues from evaporation, the difference between those shown by the dry and wet bulb thermometers extending to as much as 13° Fahrenheit, and also that the temperatures are materially affected by the quantity of air supplied and the time and distance it has been coursing through the workings, as well as the time the working has been exposed for cooling.

22nd September, 1890. ASHTON MOSS COLLIERY.

	Depth.	Temperature—Fahrenheit.	
		Dry Bulb.	Wet Bulb.
	Feet.	°	°
Roger Seam, newly opened through a main fault, with only piped air, and a few drops of water from the fault, -	2520	84	81
Six-foot Seam, in level, - -	2760	74	68
Bottom of engine-brow, - -	3105	77	71
Above ground, - - - -	...	63	58

29th October, 1890. PENDLETON COLLIERY.

	Depth.	Temperature—Fahrenheit.	
		Dry Bulb.	Wet Bulb.
	Feet.	°	°
Return air from No. 10 level workings, - - - -	2865	89	79
Face of No. 10 level, - -	2955	87	77
Entrance to ditto, 1,600 yards down engine-brow, - -	2955	80	67
Face of engine-brow, with water lodging and being wound, which accounts for lesser degrees of dryness shown, -	3000	80	74

Cheshire Salt Districts—The usually apathetic feeling among the population of the salt districts of Cheshire becomes now and then excited by the occurrence of fresh landslips, especially when a road or a building in populous places becomes engulphed, and public safety endangered. It is marvellous how human life has escaped with collapses occurring as they do without much, if any, warning. The possibility of the collapses extending to the shafts of the rock-salt mines, and thereby cutting off retreat, was referred to in my previous year's report, and it is now being

guarded against by the precaution of sinking an escape shaft at one of the principal mines, the shafts of which are in the midst of subsidences, and not far from where a collapse recently occurred.

A Bill proposing to pipe brine to Widnes in much larger quantity than is now being done has, it appears, been thrown out by a Committee of the House of Lords, the principal ground of opposition being that, as at present, the salt districts have to endure without compensation the damage occasioned to the surface by the pumping of brine, it would be unreasonable to have also the manufacture and the benefits resulting therefrom withdrawn.

Inspection by Miners.—The privilege allowed to coal miners of making inspection on their own behalf, from which beneficial results might ensue, continues to be but little availed of in this district. Either the miners dislike the responsibility and fear the consequences that might ensue by reporting unfavourably, or they are satisfied with the present arrangements. If it really be that they are afraid of consequences it justifies the belief that the power given under the 38th General Rule might be advantageously extended to include the appointment of persons *who have been* working miners, as asked for by some of the miners' agents.

Mr HENRY HALL, Liverpool District.

It will be noticed from the figures I have given that Northumberland and Durham raise quite twice as much mineral for each life lost by "falls" as Lancashire does. When we ask, why is this? the usual answer is that the roofs of the mines in Lancashire are of much more difficult and dangerous character than in the two more northern counties. This is no doubt to some extent true, but it is by no means sufficient to account for the wide difference in the loss of life. Personally I am satisfied that the *system* of timbering in this district, as pointed out in many previous reports, is chiefly to blame. It would probably be impossible to alter the custom of the district in this particular and enforce that of Durham and Northumberland; but it is imperative, if any improvement is to be effected, that steps should be taken at the earliest opportunity to ensure that more responsibility will rest upon the employers to have the timbering of the working places securely and properly carried out. As bearing upon this subject, I submitted to the Inspectors of Mines at their annual meeting a resolution to the effect that in all mines where the colliers do the timbering of their own workplaces the certificated manager should be compelled by law to specify and enforce a distance which shall not be exceeded in the fixing of props and bars in the several seams in his charge.

It may be interesting to note that during the last five years, 1885-89, West Lancashire and North Wales have raised 385 tons of mineral per

annum for each person employed underground, Northumberland 398, and Durham 534 tons; the much higher figure for the last-mentioned county is probably due to the fact of a large quantity of Cleveland ironstone being included in the returns.

Mr ARTHUR H. STOKES, Midland District.

THE following table shows the lives lost and tons raised per life lost in and about mines under the Coal Mines Regulation Act in Great Britain during the year 1890.

INSPECTION DISTRICT.	Lives lost.	Tons of mineral raised per life lost.
East Scotland - -	73	230,999
West Scotland - -	52	216,527
Newcastle - - -	92	213,382
Durham - - -	58	388,149
Yorkshire - - -	102	223,722
Manchester - - -	57	188,045
Liverpool - - -	89	163,624
Midland - - -	65	317,856
North Stafford - -	43	177,204
South Stafford - -	40	253,258
South-western - -	237	43,139
South Wales - -	242	90,410
GREAT BRITAIN - -	1,160	167,763

Explosions of Fire-Damp.—I have again, for the third time, to report that no death from explosion of fire-damp has occurred in this district during the year, thus completing three years in succession without a single death from explosion of gas, a record without parallel in the history of mining in this district since the passing of the first Mines Act. It will

naturally be asked to what is this highly satisfactory immunity from fatal explosions due, and to what precautionary measures do I attribute such good results. In my opinion it is due to a combination of circumstances, the most important being the largely-increased use of safety-lamps, and the decreased amount of shot-firing, and this combined with a body of officials who appear to be more strictly enforcing the rules and firmly upholding the discipline of the mines. It must also be mentioned that the long-wall system of work, together with a current of ventilation sweeping along the coal face, and with the least amount of goaves and roadway left standing open, materially simplifies the daily working of the mine. In such system of work, if well ventilated and properly carried out, there should be little difficulty in keeping the mine free from the ordinary daily issue of gas, and it is only outbursts of large volumes of gas that are to be dreaded in such mines.

I find that there are about 33,287 safety-lamps in daily use in this district, and from the annual official returns there are 53,137 persons employed underground, therefore 62 per cent. of the persons employed underground work with a safety-lamp.

County.	Description of Safety-lamp.						Total.
	Marsaut.	Mueseler.	Bonneted Clanny.	Clanny.	Davy.	Various Kinds.	
Derbyshire - -	11,376	2,156	3,837	1,877	75	848	20,169
Leicestershire - -	942	48	590	186	..	25	1,791
Nottinghamshire -	4,530	1,155	3,299	273	292	629	10,178
Warwickshire - -	673	34	324	..	28	90	1,149
Totals - -	17,521	3,393	8,050	2,336	395	1,592	33,287

The freedom from fatal explosions during the last three years must not be understood to mean freedom from gas. The deaths in previous years, and the recent large outbursts of gas which have taken place, together with an examination of the official report books of the mines, all point to the probability that the issue of gas is no less in quantity, and therefore the good result must be placed to the remedial measures rather than a diminution in quantity of gas found in the district.

Safety Lamps and Eyesight.—The question of injury to miners' eyesight by the use of safety lamps still occupies the attention of a few persons in one part of my district.

I have endeavoured to obtain the best information I could with regard to the supposed injury to eyesight. and the evidence I have obtained not only strongly corroborates my previously expressed opinion, but proves that miners' nystagmus (the medical term for the injury referred to) may and does occur to miners who work with naked lights, as well as to those who use safety-lamps.

The cause and treatment of miners' nystagmus has been for some years the special study of Dr Simeon Snell, Sheffield, opthalmic surgeon to the Sheffield General Infirmary and to the Institution for the Blind. Dr. Snell has not only carefully examined a large number of miners' eyes, but he has been down the mines to see the men at work, thus making himself practically acquainted with the *modus operandi* of getting coal, and the way in which safety-lamps are used. His residence in Leeds, and for the last 17 years in Sheffield, where collieries abound, has afforded him excellent opportunities of becoming conversant with the affection to miners' eyesight.

I am indebted to Dr. Snell for a copy of a paper on miners' nystagmus which he read before the Opthalmological Society of the United Kingdom in the year 1884, and from this paper I take the following extracts :—

Dr. Snell says: "The experience of most observers indicates the "peculiarities of pit life and the mode of employment of the miners, as "the direction in which the cause of the affection is to be sought. In his "opinion the affection depended for its causation on the position the miner "assumed while at work."

"A miner coming under treatment for this affection will mention that for a varying time he has suffered from the lights and other objects dancing before him, and may complain of giddiness. Cases vary much in severity, some there are in which the movements apparently never cease, and then again there are others in which the disease may be called latent."

"Many have been the causes assigned for the production of this kind of nystagmus; the impurities of the atmosphere of the pit have been credited with occasioning it, and so has the employment of safety lamps."

"My experience has always led me to regard the mode of working of the miner as directly causing the nystagmus, whatever subsidiary parts other influences may play in its production."

Dr. Snell points out that the men engaged in mining have various kinds of work to perform, and that he has never met with cases of nystagmus amongst men solely engaged in hauling, tramming, or datal work, but that "it is with the coal-getters, whose work necessitates their lying on "their sides (holers), that in my experience the nystagmus is associated;" and in further support of this experience he goes on to say: "Observations "of cases of nystagmus soon taught me that the patients so suffering had "worked on their sides, and I believe that of all the many instances at "different times which have come under my notice, without exception, as "far as my memory and records go, the miners attacked have been those

"whose work has been done on their sides more or less, and that the "disease occurs chiefly, if not entirely, in those colliers who are compelled "to do their work whilst lying on one of their sides;" and further, "I "recollect no case of nystagmus occurring in a miner whose work was not "of this character."

Dr. Snell refers to the light of an open lamp and a "Davy" lamp as 10·0 : 3·0, and says such a feeble light "may have an influence in occasion-"ing the disorder, but I believe it cannot but be a very secondary one, "otherwise why should the disease be confined to the hewers of the coal "(holers), and not be found among the trammers and labourers (datalers), "considering that all workers in the pit employ equally the safety-lamp. "Certainly if this were the prime cause, the disease should be more equally "diffused amongst the various classes of miners. The fact of the sufferers "from this disorder being, as I have stated, found in one particular kind "of workmen ought of itself to indicate, as the cause of the nystagmus, "some peculiarity in their work. Nystagmus has been found to exist "amongst workers in mines where safety-lamps were not employed."

The disease is attributed to the oblique direction the holer's eyes assume whilst he lies upon his side doing his work. Simply looking upwards may be tiring, but if the eyes are turned in an oblique direction the strain is greater, and if carried to excess may injure the eyes.

I am informed by Dr. Snell that his more recent observations confirm those he had already published. The fact of cases of nystagmus being found among the workers with naked lights is sufficient to show that the prime cause for the affection cannot be associated with the use of safety-lamps. He tells of a man under his care who, after working with safety-lamps for 14 years without suffering in his eyes, proceeded to work at a pit where candles were used. He had been employed there for 3½ years, and during the last 12 months he experienced symptoms of nystagmus, and had ultimately to leave work (his work was similar under both conditions) and seek medical aid. Dr. Snell has collected a mass of facts and a record of a large number of instances of men suffering from the affection, which is shortly to be published, and which will, he believes, be very corroborative of the views he has set forth, viz., that the prime cause of the affection is to be found in the position assumed by the miner at his work, and that the part played in the causation by imperfect illumination (safety-lamps) can only be a secondary one.

It must be added that the light given by the safety-lamp of to-day equals ·7 of the light of a candle, and is much superior to those in use in 1884, when Dr Snell's observations were published.

The opinion of such gentlemen, formed, as in this instance, after investigations conducted in a practical and scientific manner, must be received with respect.

Falls of Roof and Sides.—I again repeat the warning I have given in my previous reports with regard to deaths from falls, viz.:—That miners

in charge of working places should anticipate danger, and not trust too much to either outward appearances or rapping of the roof. I seldom hear of a scarcity of spare timber in a working place, and considering that workmen have an unlimited supply free of charge, they should not hesitate to set it freely, and fully secure the roof and sides of their working places.

PERSONS EMPLOYED UNDERGROUND AND TONS RAISED PER DEATH FROM FALLS OF ROOF AND SIDES.

INSPECTION DISTRICT.	Persons employed underground per death.	Tons of mineral raised per life lost from falls.
East Scotland - -	1,201	510,996
West Scotland - -	1,417	562,971
Newcastle - - -	1,665	654,370
Durham - - -	1,673	750,448
Yorkshire - - -	1,356	484,013
Manchester - - -	1,071	382,806
Liverpool - - -	763	264,773
Midland - - -	1,660	645,620
North Stafford - -	961	380,988
South Stafford - -	1,034	538,174
South-western - -	1,136	329,804
South Wales - -	883	276,953
GREAT BRITAIN - -	1,167	448,400

Managers.—I must again call managers' attention to the warning I gave them in my last report. I find that in some cases they do not visit the underground workings of the mine so often as they did before under-managers were appointed. In a few cases I have known months to elapse between the underground visits of a manager to the mine under his charge, and when complaining of this I am referred to the 21st section of the Act, which requires that the "daily supervision shall be exercised *either* by the

manager *or* by an under-manager," and so long as the under-manager exercises the daily personal supervision the manager is free from all legal obligation to go down the mine.

The interpretation of the 21st section of the Act is to me unsatisfactory. I am afraid the underground workings of the mine will get less of the superior skill and mining ability which a manager should possess, and the practical management of the mines will be left in the hands of the under-managers. As an illustration to what extent this may be carried, the owners of one colliery in my district appointed an under-manager, who resides near the mine and who exercises daily personal supervision. They also appointed a certificated manager, who resides nearly 100 miles from the mine, and who, the owners informed me, would visit the mine once a fortnight, thus practically placing the care and direction of the mine in the hands of an under-manager.

Ambulances.—I am pleased to say that the work of training officials of the mines in rendering first aid to the injured, still meets with marked success. I frequently find, in investigating cases of accident, that the injured person was immediately attended by an ambulance man, who had been enabled to relieve suffering and prevent further damage to the injured by careless removal.

Mr W. N. ATKINSON, North Staffordshire District.

In connexion with explosions a case was reported to me where it was stated by a collier that gas was ignited by a spark from his pick. No one was injured. He said it was merely a momentary flash. There was a small blower or piper of gas at the face of the level where it occurred, but this did not continue to burn. I questioned the man closely, and have no reason to doubt his word. He reported the occurrence to the fireman, and said that his mate, who was filling coal close behind him, also observed that the place was suddenly lighted up. This occurred in a very dusty and fiery seam, and had there been sufficient gas to raise and ignite the coal-dust, there would have been a serious explosion.

When we consider that nearly half the loss of life in mining operations is due to falls of roof and sides, it is evident that the matter calls for the most serious attention, and I would suggest to the managers of collieries that they should endeavour to reduce the number of these accidents by drawing up printed codes of instructions as to timbering, for the different seams or districts of seams under their charge. If the maximum distance at which props and bars were to be set, was so laid down and enforced, together with such other requirements as appeared necessary and reasonable in each seam or district, it is probable that a proportion, and possibly a considerable proportion of these accidents would be avoided.

I would direct the attention of colliery owners and managers to the list

of prosecutions of workmen for breaches of the rules. Several of the offences were of the most serious character, and might have resulted in great loss of life and property, and I would point out that one conclusion which may be drawn from such a list is, that the supervision and discipline maintained in the mines are not what they should be, or such serious offences as illegally firing shots, unramming shots, opening safety lamps, and smoking in forbidden places would not be so frequent. Owners and managers are bound by the Act to prosecute the offenders, who in such cases deserve the severest punishments inflicted; but it must be borne in mind that it is no more possible to prevent breaches of the rules and to maintain proper discipline in mines, without sufficient supervision, than it is to maintain proper discipline in an army without sufficient officers. In my opinion one of the greatest advantages obtained by the deputy-overman system, as carried out in the North of England, is that it ensures the presence in the mines of a sufficient number of officials to maintain good discipline. That system is usually discussed mainly in connexion with the setting of timber, it is true the deputies set much of the timber, besides doing other work which in other districts is done by the colliers, but the advantage of the system lies fully as much in the maintenance of discipline as in merely setting timber.

Mr JOSEPH S. MARTIN, South-western District.

It having been publicly alleged that the number of accidents which occurred to miners after having worked eight hours were greatly in excess of the rest of the shift, in consequence of exhaustion rendering the men unfit to regard, and to take the requisite precautions for their own safety, you gave instructions that the hour of the shift in which each fatal accident occurred is to be stated by each inspector for his district. No. 7 Summary of the statistical part of the Inspectors' reports shows the allegation to be groundless, as well for this district as for the kingdom generally.

For this district they were :—

	Underground.		Surface.
	Falls.	All Causes.	
1st hour of shift - - - -	4	5	...
2nd ,, - - -	4	6	1
3rd ,, - . -	1	3	1
4th ,, - - -	4	5	...
5th ,, - - -	4	6	...
6th ,, - - -	5	9	1
7th ,, - - -	5	7	1
8th ,, - - -	2	4	...
9th ,, - - -	1	5	1
10th ,, - - -	1	1	...
Total - - -	31	51	5
		56	

I further obtained (for the last half of the year) the hour of the shift in which each *underground* accident occurred which was reported to me, whether fatal or non-fatal ; viz. :—

In the 1st hour of shift	... ...	13	occurred.
,, 2nd ,,	... .	18	,,
,, 3rd ,,	... ...	17	,,
,, 4th ,,	... ...	11	,,
,, 5th ,,	... .	16	,,
,, 6th ,,	... ...	15	,,
,, 7th ,,	.. ..	12	,,
,, 8th ,,	... ...	20	,,
,, 9th ,,	.. ..	10	,,
,, 10th ,,	... ...	3	,,
Total	... ...	135	

In view of the frequent remarks which are made on the subject, and of the large increase in the number of persons employed underground in mines under the Coal Mines Act, reaching during the year to 43,212 for

the kingdom, and 2,575 for this district, it may be well to refer here to the 39th General Rule, by which persons are not allowed to work alone at the face of the workings until they have had two years' experience of such work under the supervision of skilled workmen, or unless they shall have been previously employed for two years in or about the face of the workings of a mine.

I may say that, since the Act came into force, I have not met with a single instance in which this rule has been contravened, although frequent inquiry has been made on the subject. It is quite possible that there may be cases in which it is contravened, but *if so* they are *very* exceptional. I have not even met with a case of two such disqualified persons working by themselves, although the rule appears open to the construction that they might do so. I have had conversations with miners and their agents on the subject, and have heard them make the allegation that the rule is evaded. I have asked them to inform me of a single instance, and I have told them distinctly that if they will inform me even of two men of less than two years' experience being employed, as referred to, without a skilled miner with them, I would undertake, by personal influence, and without legal proceedings, to have it stopped.

Their reply has been that they are unable to do so, but that there is an impression that the rule is not complied with. I think under such circumstances, in fairness to the managers and others, it must be assumed that the rule is loyally carried out, as otherwise it must certainly have come under notice.

Mr JOSEPH T. ROBSON, South Wales District.

WITH reference to "falls," the naked light collieries were 17 per cent. safer as regards separate accidents, and 22 per cent. safer in loss of life, based on the persons employed, and 26 and 31 per cent. respectively safer based on the minerals raised.

With regard to shaft accidents, the comparatively large number of persons employed in mines entered by levels and slants, most of which are worked by naked lights, accounts for the greater immunity from accidents under the head of naked lights.

In accidents and loss of life by miscellaneous causes underground, it also appears that naked-light collieries were safer by 21 per cent. on the basis of persons employed, and 30 per cent. on the minerals raised.

Discarding explosions and including all other underground fatal accidents and loss of life, it appears that naked-light collieries were 25 and 28 per cent. safer respectively, calculated on the persons employed, and 34 and 37 per cent. safer respectively on the quantity of minerals raised.

The examinations made of the scene of these accidents from falls, and the evidence given at inquests, have shown, as in former years, that it is not for the want of a sufficient supply of suitable timber, nor to any

appreciable extent because the sufferers have failed to remedy defects apparent to them or pointed out by an official, that such a large number of fatalities occur annually. On the contrary, it far more frequently happens that nothing unusual was discovered by the fireman or other official in making the inspections required by the General and Special Rules, yet a fall of roof takes place within a period varying from a few minutes to two or three hours after such inspection. Further, in the majority of cases the sufferers, when able to describe the circumstances, and their companions who have escaped maintain that the places appeared safe up to the last moment. Fatalities are more numerous in "good" and "fairly good" roofs than in acknowledged bad roofs. These facts, and a careful study of the whole circumstances, only corroborate what the experience of previous years had shown, viz., that the majority of fatalities by falls occur from an over estimate of the natural security of the newly-exposed roof and from the inability to detect latent weaknesses therein, and thus leaving it insufficiently supported by propping. Surely it is not too much to hope that every owner and manager in the district will, at no distant date, adopt and rigidly enforce such additional precautions as shall be commensurate with the evil to be dealt with, and so endeavour to reduce this annual loss of life to a minimum.

As regards falls of sides, I look upon the reduction in the fatalities as in a great measure due to increased spragging, which I am glad to say is now being better enforced. The 22nd General Rule, which deals with this matter, is more definite than the 21st, sprags or holing-props having to be set up where necessary *at least every six feet.*

Fifteen accidents, with the loss of fifteen lives, happened in connection with trams on horse roads. Most of the sufferers were hauliers, who were run over or crushed by the trams in their own charge, and boys, nominally door boys, who were either crushed or run over while interfering with the trams, or by falling in front of trams while going along with hauliers to open and close the doors.

The trams in general use are larger and the loads carried heavier in this district than in any other. The adoption of a tram capable of carrying a large load is doubtless an important element in the economy of a colliery. Moreover, heavy trams and loads, requiring large horses, guarantee large roads, which are advantageous in the ventilation of a colliery, afford more comfort in travelling, and are for every reason to be encouraged. Such roads ought to be safer than those of smaller dimensions for haulage purposes. It would appear, however, that in this respect economy and safety do not go together, as is the general rule. Few cases of accident could be traced to the failure in maintaining roads roomy enough for the trams and loads, and it is seldom that fault can be found with them in any way. Yet the fact remains that, according to statistics, the haulage of a given quantity of coal is performed much safer in nearly every other mining district than in this.

The enforcement of strict discipline upon hauliers, door-boys, and others on roadways is probably more difficult than in other occupations underground; but it has appeared to me that the efforts made in this direction are far from being as general as the circumstances require them to be. I see no reason to alter my previously expressed opinion, that the high death-rate is chiefly due to the want of care on the part of hauliers in the management of their horses and trams, and in permitting door-boys to interfere with the horses and trams, a state of matters which a rigid enforcement of the Special Rules would do much towards remedying.

Safety Lamps.—There are 112 coal mines in which safety lamps are used exclusively, 24 in which they are used partially, and in the remaining 221 mines working coal, safety lamps are only used by firemen for the examinations under General Rule 4.

Including the estimated number in eight collieries from which replies were not received, there appear to be fully 49,000 safety lamps in daily use in the district. Of these, 80 per cent. are Cambrian and bonneted Clanny lamps, about 12 per cent. shielded Clannys, fully 6 per cent. Marsauts, and 2 per cent. lamps of various other kinds, chiefly used by officials.

About 67 per cent. of the lamps in use are the property of the workmen.

In 102 collieries out of 138 the gauzes are cleaned at the colliery generally by men paid by the owners, and in the remaining 36 cases the gauzes are either taken home by the miners and cleaned there, or cleaned by them at the colliery. I much regret to say that amongst the latter class are some of the oldest and largest collieries in the district.

Explosives.—Out of 184 mines from which replies were received, there was some blasting during a fortnight in 172. In 96 of these mines safety lamps only are used, and as blasting is practised in at least eight more such mines, there are not less than 104 safety-lamp mines in which explosives are more or less used.

In 51 of the safety-lamp collieries there was blasting in coal as well as in stone.

From the figures supplied it would appear that there are over 900,000 shots fired per annum in collieries worked exclusively with safety-lamps which is equal to 3000 per day.

About 40 per cent. of this blasting is in ripping roof and floor; 17 per cent. in drifting, making 57 per cent. in stone work of one kind and another. Of the remainder, 14 per cent. is done in coal getting by the pillar-and-stall method, and 29 per cent. in that by long-wall. (The quantity of coal got by long-wall far exceeds that by pillar and stall.)

I estimate the total number of shots fired in all mines in the district during the year at 1,565,200. There were 22 separate accidents, fatal and non-fatal, reported last year in connection with blasting operations, so that there was one accident for every 71,145 shots fired.

Watering of Roadways for Laying the Dust.—In 37 collieries piping and

sprays are used for this purpose, the total length being 111,993 yards, or an average of over 3000 yards in each of these mines. The greatest distance from the shaft to which the pipes are laid is 8490 yards. With two exceptions the above collieries are worked exclusively with safety-lamps.

There are also 501 tanks in use in 83 collieries. In nearly all the collieries where there is piping some tanks are also used for watering the inbye portions, and especially where any blasting is done on the roadways.

Minutes of Proceedings of the INSTITUTION of CIVIL ENGINEERS, Vol. xcix.

THE TUNNEL OF BRAYE EN LAONNOIS.

(Notice sur les Modiles, Dessins, &c., des Ponts et Chaussées et des Mines à l'Exposition Universelle, 1889. P. 255.)

THIS tunnel is 2580 yards long, and passes under the summit at a depth of 400 ft., and was intended to be in the lower sands with about 40 ft. of cover, consisting of clays and lignites, between it and the overlying Soissons sands; but a fold of these clays at about 300 yards from the Oise end brings the crown of the arch in contact with the Soissons sands, from which a great flow of sand and liquid clay came into the heading, so that it became necessary to carry out this part of the work with compressed air.

The working chamber at the face of the tunnel was formed by a wall of masonry, 11 feet thick, about 400 feet from the mouth of the tunnel, perforated by air locks. Great difficulty was experienced in keeping the chamber air-tight, the compressed air finding its way out not only through the penetrable strata above, but also along the extrados of the roof and the timber struts required for the support of the ground, and it was not till 20 inch buttress rings had been built on each side of the dam that the pressure could be brought up to 1·8 and 2 atmospheres (absolute), under which condition the roof was completed to about 220 yards from the mouth, at the rate of 13 to 16 yards per month, when the work was stopped by an accident caused by the compressed air getting into the overlying pyritic lignite-bearing strata, which, after driving out the water, oxidized the pyrites, and thus ignited the lignite, and the products of combustion penetrated the chamber and caused the death of seventeen men. In order to get access to the workings six boreholes were put down from the surface to the seat of the fire, and the gases were driven out of the chamber through these holes by the compressed air. When the chamber had been secured the pressure was removed, and the surface water then penetrated to the seat of the fire and extinguished it; but the heat was great enough to keep the water which trickled from the roof at a

temperature of 90 degrees for six months. After this accident the first dam was removed and another one erected at 614 feet from the mouth. This was built of concrete between retaining walls of dressed stone, and was 22 feet thick in the centre and 26¼ feet thick at the bottom, where two air locks were placed, 5 feet 5 inches wide by 7 feet 3 inches high, lined with sheet iron and provided with doors closing against seats faced with indiarubber. Through the upper part of the dam two tubes passed and served for the removal of the debris, which was accomplished by means of air pressed to four atmospheres. The difficulty of keeping this second dam tight was so great also that it was resolved to wall up the face at 820 feet from the mouth and increase the dam by leaving from 60 to 70 feet of ground unbroken with the exception of three small galleries, two at the bottom and one at the crown of the arch, which were carefully lined with masonry. The top one leaked to such an extent that it had to be walled up, but the lower ones succeeded better, and a pressure of 2·3 to 2·4 atmospheres was maintained in the working chamber. The finished tunnel was 28 feet high, 24 feet 7 inches broad at the bottom, and 26 feet 3 inches at the springing of the arch, and the cost per yard of this part of the work was £248. J. G.

Minutes of Proceedings of the INSTITUTION of CIVIL ENGINEERS, Vol. xcix.

EXPERIMENTS WITH A COMPOUND WINDING ENGINE AT THE SKALLEY COLLIERY, SAARBRÜCKEN.

By —— SCHMELZER.

(Zeitschrift für das Berg, Hutten, und Salinen Wesen, 1889, p. 191. One plate.)

THIS compound engine was originally a single 43·3 inch cylinder winding engine, 61·8 inch stroke, winding two full tubs of 10 cwt. each from a depth of 186 fathoms with a pressure of 44·12 lbs. per square inch. It was compounded to suit an increased steam pressure of 95½ lbs. per square inch by adding a second cylinder 31½ inches diameter. The engine now winds four tubs at a time on two decks, there being a counterbalance rope under the cages weighing 8·06 lbs. per yard. The whole winding is done in 40 seconds, at an average speed of 27·89 feet per second, the average piston speed being 4·95 feet per second.

In order to show the advantage of the compound system the author gives, together with the experiments on this engine, tables of results from other winding engines, which show that the gross fuel consumption per hour per useful horse-power was 7·31 lbs. for the compound engine, and 11·88 lbs. for a double cylinder ordinary winding engine at the same colliery. J. G.

Minutes of Proceedings of the INSTITUTION of CIVIL ENGINEERS.
Vol. xcix.

ROPE HAULAGE TRIALS, ORIOLLE SYSTEM.

By P. DE MONICOURT. P. 426.

("Le Génie Civil," vol. xvi., p. 3., Nov., 1889. Five woodcuts.)

IMPROVEMENTS in the inland navigation of France resulted in an increased tonnage traversing the canals, which by encumbering the principal waterways so raised the cost of transport that haulage by wire rope cables is now being introduced. Trials were made on a portion of the St. Quentin Canal, 1⅞ miles in length, on which there were three locks, two bridges, and two curves, one of them only five chains in radius. The cable is endless, having a sectional area of 0·285 square inches, and is composed of six strands of seven wires each, and is carried along each bank outside the towing path on pulleys suspended on light braced standards placed about 200 feet apart, the sag of the rope between them being about 2¼ feet. It is driven by a 30 H.P. engine, and arrangements are provided for regulating tension and length. The grooved pulleys supporting the cable are hung from their supports, and provided with a counterpoise weight at the opposite end, so that they readily adjust themselves to any suitable plane according to the varying tension of the cable, which is thus kept in place. The tow rope is attached to the cable by a metal fastening called a "menotte," which consists of a metal socket enveloping the upper part of the cable. The socket contains three steel rings, formed in two pieces, so as readily to encircle the cable; and a two-armed lever either pushes up the central ring when pulled by the tow rope, and thus wedges the cable between the rings and imparts its motion to the tow rope, or releases the menotte by a pull on the other arm with the cord controlled by the boatman, which then slides on the cable. The turning of the cable, moreover, in its onward motion does not affect the tow rope, as the steel rings can turn in the socket. The tow rope is wound round two bits, with cast iron jaws, placed on the barge. In starting, the rope in winding turns the bits, and gradually presses them more and more against their conical pivots, and a ratchet arrangement prevents the maximum tension of 100 lbs. being exceeded, though this tension can be modified if desired by a modification of the tension of the spring in the apparatus. The tow rope is attached to an unlocking lever, so that when the tension on the rope is suddenly increased by the barge running into the bank, grounding, or any other cause, the pull on the lever makes it release the bits as soon as the tension exceeds the arranged maximum; so that the rope is slackened whilst the cord for unloosing the menotte, remaining unaltered in length, soon exerts the necessary pull, and releases the tow rope from its grip of the cable.

J. G.

Minutes of Proceedings of the INSTITUTION OF CIVIL ENGINEERS,
Vol. xcix.

THE SHAFTS OF THE BRAYE TUNNEL.

P. 455.

(Notice sur les Modèles, Dessins, &c., des Ponts et Chaussées et de Mines à l'Exposition Universelle, 1889. P. 270.)

THE middle section of this tunnel which is in course of construction for a navigable canal between the basins of the Rivers Oise and Aisne, is reached by two shafts, one 301 feet and the other 378 feet in depth, and these had to pass through 40 to 70 feet of the Soissons sands (sands and liquid clay) below the water level.

The shafts were rectangular, 5 ft. 3 in. broad and 14 ft. 1 in. in length, divided into three compartments, 5 ft. 7 in., 5 ft., and 3 ft. 6 in. in length respectively, and were put down to about 30 feet below water level, with close boarded timber frames 40 inches apart. Cast iron tubbing was then substituted, a separate tubbing being used for each compartment. The rings were 1·2 inches thick and 39·4 inches high, ribbed and flanged inside, and united by bolts through the flanges, the joints being made by an indiarubber ring, and the bottom ring had a cutting edge. The tubbing column was erected at the bottom of the shaft in a depth of 25 to 30 feet of water, and when completed pumping was stopped, and the water allowed to rise, so as to prevent the formation of dangerous hollows behind the timbering of the upper part of the shaft. The sand was excavated at first by a bucket dredger, then shell augurs were tried, but finally divers filling the sand directly into tubs were found to be most expeditious: and, after removing sand at the bottom of the compartment, but without uncovering the cutting edge, the column was forced down by hydraulic jacks of twenty tons' power, 20 to 40 inches, when the sand was again cleared out. On account of the small breadth of the ribs dividing the different compartments, they gave way when entering the clay below the sand, and a water-tight joint had to be made by the aid of compressed air at a pressure of 2·35 to 2·8 atmospheres. The joint consisted of six oak rings, 9½ to 10½ inches square, and from 4 feet 4 inches to 6 feet inside diameter, built into a pile 5 feet high. The broadest ring at the bottom rests on the impermeable strata, and the narrowest one bears against the bottom of the tubbing, the cutting edge resting in a groove in the upper surface, containing an indiarubber washer. The top ring (No. 1) under the tubbing was first placed provisionally, then the broader ones (Nos. 6 to 3) were built up and the hollow behind concreted, and finally No. 2 was driven in between No. 3 and No. 1. Below these rings the shafts are secured by close cribs of oak for a distance of 6 feet, below which ordinary frames 40 inches apart are used as in the upper part of the shafts.

The cost of these special appliances to the two pits was £11,240 for a length of 161 feet 9 inches, or about £210 10s per yard. J. G.

Minutes of Proceedings of the INSTITUTION of CIVIL ENGINEERS, Vol. xcix.

THE CONSTRUCTION OF RAILWAY EMBANKMENTS IN SOFT SOILS.

By JHR MARTINI BUYS. P. 454.

(Tijdschrift van het Koninklijk Instituut van Ingenieurs, 1888-89. P. 110.)

IN early railway construction in the Netherlands, in order to secure a stable foundation in compressible and treacherous soils, the surface of the ground was covered with fascine mattresses, upon which the embankments were raised; but these have the drawback of never settling completely, requiring constant raising as the subsoil, under the influence of weight or influence or vibration, sinks or is pressed out sideways.

In recent years, in constructing the line Shedrecht-Gorcum, the silt and the mixed strata of bog, running sand, and slippery clay were removed by dredging, sometimes to considerable depth, and the trenches then filled up with sand. On the line now being constructed between Schiedam and Maassluis it was not in every case possible to revert to this method, as the railway passed close to existing river embankments, polder dams, and canals. In these cases the top layer only of soil and turf was removed and the sand tipped as much as possible on the centre line, which sinking down displaces the underlying strata sideways, and causes the surface of the ground to bulge up on each side; but this occasions inconvenience only where canals are concerned, and can be easily corrected by dredging. Subsequent borings proved that the sand did not always go vertically down, but often went sideways, according to the nature of the morass, and resulted in great differences in time of settling. The cost was about £30 per lineal yard, an amount for which a viaduct on piles could not have been constructed. J. G.

Minutes of Proceedings of the INSTITUTION of CIVIL ENGINEERS, Vol. xciv.

ON HAND-POWER DIAMOND-BORING MACHINES.

By G. NORDENSTRÖM. P. 484.

(Jern Kontorets Annaler, 1888, p. 161.)

(Oesterreichische Zeitschrift für Berg-und Hüttenwesen xxxvii., p. 468.)

THE use of bore-holes in underground workings for the discovery of ore deposits has been practised in Sweden for a considerable time. Thirty or forty years ago, the maximum distance attainable by percussion hand-boring was 44 feet. In 1872, the method of diamond-boring was adopted in coal-bearing rocks in Scania, and about 1,100 yards of borings were made by foreign companies at an average cost of £6 5s per yard—for which price shafts could have been sunk in the same ground. Subsequently, an American prospecting machine, driven by compressed air, was adopted in the Norberg mines, where a bore, inclined upwards at a slope of 1 in 100, was driven for a distance of 33 yards through granite, felstone, and lime-

stone. The average length driven per shift was 8 feet 8 inches, the maximum of 16 feet having been obtained in limestone. About 220 yards of borings were done in the district at an average rate of 7·73 feet per shift, but the cost was still almost the same as that for which levels could be driven at the rate of wages current in the locality, so that the only saving was in time.

In 1887, a light, simplified manual-power machine was introduced. The bore rods are iron tubes, 1·29 inch external, and 0·98 inch internal diameter, and 5 feet long, screwed together. Eight diamonds, four inside and four outside, are used in the boring head, which is of 0·94 inch bore, giving cores of 0·86 inch diameter. The average weight of the diamonds was between 0·75 and 0·8 carat each, and the cost last year about £2 14s per carat. The total weight of the machinery, including 55 yards of rods and the force pump and gear for flushing the hole, is 14 to 15 cwts. Up to the end of 1888, a total length of 3,250 yards had been carried out by these machines, the longest bore being 200 feet from the face. Most of the borings have been underground, 25 per cent. being vertically downwards, 37 per cent. nearly horizontal, and 38 per cent. varied between 58° upwards and 78° downwards. From four to six men are required for working the machine, and about 1¼ gallon of water per minute is needed for flushing out the hole. The rate of advance per shift of 8 to 9 hours varied from 2½ to 4¾ feet. The total cost is from £1 6s 6d to £1 8s 6d per yard, while that of driving levels, including the lifting of the *débris* to the surface, varies from £2 15s per yard in ordinary to £3 17s 6d per yard in very close ground. J. G.

Minutes of Proceedings of the INSTITUTION of CIVIL ENGINEERS, Vol. xciv.

GEOTHERMOMETRIC MEASUREMENTS IN THE BORE-HOLES AT SCHLADEBACH AND SENNEWITZ.

(Zeitschrift für das Berg-, Hütten-, und Salinen-Wesen, 1889, p. 171.)

SCHLADEBACH bore-hole was begun in August, 1880, by the Prussian State Mining Department to seek the source of the brine springs of Dürrenberg, and to further prove a coal seam. Over the hole a tower 108 feet high was erected, which admitted of the use of bore-rods 65 feet in length. The apparatus was arranged to work on different systems, as the nature of the rock required, but that most employed was the diamond drill. It began with a diameter of 11·2 inches, and ended with an inch-and-quarter hole at a depth of 5,734 feet. Observations of the temperature were taken at intervals of 98·4 feet throughout the entire depth, and the increase of temperature with depth was found to be remarkably uniform. The temperature recorded at 19·5 feet below the surface—where the author assumes surface influence ceases—was 50·45°, and at the extreme depth, 133·88° F.

The bore-hole of Sennewitz began in July, 1883, in search of coal measures, and was abandoned at a depth of 4,766 feet.

The following table of observations is given :—

Name of Borehole.	Total Depth.	Depths from which Calculations were made.	No. of Observations.	Depth Equal to 1° Fah.
	Feet.	Feet.		Feet.
Schladebach, - -	5,734	19 to 5,734	387	67·3
Sennewitz, - -	4,766	2,473 to 3,515	96	66·8
Lieth, - - -	4,388	1,396 to 4,139	17	64·0
Sudenburg, - -	—	98 to 1,863	19	59·4
Sperenberg, - -	4,065	721 to 3,496	9	58·7

J. G.

Minutes of Proceedings of the INSTITUTION of CIVIL ENGINEERS, Vol. xciv.

MINING PROGRESS IN PRUSSIA DURING THE YEAR 1888.

P. 488.

(Leitschrift für das Berg-Hüten-und Salinen-Wesen, 1891. P. 121.)

IMPROVEMENTS and researches in mining are annually dealt with by the Prussian Government officials, and among other things it is stated in this article that experiments carried out with the explosive roburite show that it is one-third less powerful than dynamite, and that the gases resulting from its explosion are very injurious to the health of the workmen. Carbonite is also unfavourably reported on as regards the health of the workmen using it.

At the Government colliery of Saarbrücken all haulage planes have been ordered to have an inclination of 1 in 200 instead of 1 in 500, for the purpose of diminishing the cost of transport and ensuring better drainage.

At the Camphansen Colliery 13,000 yards of water-piping have been laid. The pipes in the shaft are 3in. diameter, in the workings 2in., and at the places where the water is sprinkled ¾in. in diameter, and in every working place there is a 5-yard hose pipe fitted with a spray. There are sprays in all the haulage and air roads, 50 yards apart—two at each place, one at one-third, and another at two-thirds of the height of the gallery.

In Upper Silesia, at the Königin Luise Colliery, the Schanschieff portable primary-battery electric lamp has been tried with success. The lamp weighs 4·6 lbs. charged, costs 30*s* 6d, and while burning about 1d per hour.

J. G.

THE JOURNAL of the BRITISH SOCIETY of MINING STUDENTS.
Vol. XII., No. 6.

THE SOMERSETSHIRE COALFIELD.

By G. E. J. M'MURTRIE.

THE Somerset Coalfield is particularly interesting on account of the geology of the district, and the thinness and consequent difficulty of working the seams. The field forms three district basins, the Parkfield out in the north, separated from the Radstock one in the south by the Kingswood anticline, and the Nailsea one in the west. The divisions of the coal measures are strongly marked. The upper division, which belongs to the highest beds of the British Coal Measures, comprises two distinct series, viz.—The Radstock series, and the Farrington series, separated by a distinctive and very continuous band of red shales, which forms an easily recognisable geological horizon. The lower division, which also consists of two series—the New Rock series and the Vobster series—is separated from the upper division by a great thickness of hard sandstone rock, locally known as the "Pennant." Below this comes the Millstone Grit, the Mountain Limestones and Limestone Shales, and finally, the Old Red Sandstone. The Old Red Sandstone roughly encircles the basin. The Mountain Limestone is more continuous, and is of great local importance as the source of supply of road metal, building stone, and lime. It is of a deep blue colour, full of typical fossils, and is probably 3000 feet thick. There are few exposures of Millstone Grit, but it is supposed to encircle the coalfield, and is estimated to be 500 feet thick in the south end, and 950 feet in the north end of the basin. The extreme length of the coalfield, from north to south, is 26 miles, and its breadth, from east to west, 12 miles, making an area of 238 square miles, of which 190 are covered by recent formations.

Geological Position.—One of the most interesting features of this coalfield is the number of recent formations which overlie the coal measures, and which greatly add to the difficulty of mining operations, as, where present, there can be no surface indications to go by. The recent formations consist of the Oolite, the Lias, and the New Red Sandstone, named in descending order. From the Oolite the famous Bath building stone is obtained, both in open quarries and in mines. The Lias also supplies good building stone, road metal, and natural hydraulic lime. The New Red Sandstone series consists chiefly of fine close-grained red clay rocks, and having at its base a water-tight bed, it retains the surface water, and is the source of heavy feeders of water, which give great trouble in sinking, and have to be tubbed back. The newer formations are conformable one with another, and are nearly horizontal, while they are violently unconformable with the older formations upon the upturned and denuded edges of which they rest. The entire absence of the Permian is a noticeable feature of this unconformability. The position of

this coalfield, underlying all these later formations, is a hopeful sign that coal may yet be found adjoining known coalfields, in places where its existence has up till now seemed more than doubtful, perhaps at considerable depths, yet, looking at the number of the overlying measures in this field, at depths quite accessible.

The coal seams may now be briefly described. The Radstock series, 250ft. thick, contains six workable beds, together equal to 11ft. 4in. of coal. of good quality and durable, giving a clear hot fire, and well suited for household use. It cokes, but contains too much sulphur to make a first-class coke. The roof is generally blue shale, and the thill coarse fire-clay. Barren ground, 550 to 750 feet thick, comes next, followed by the Farrington series, 310ft. thick, containing 10ft. 8in. of coal in six seams. These seams supply household coal, though of a poorer quality than the Radstock coals; they are less bituminous, but contain less sulphur, and make fairly good steam coal. The Pennant sandstone comes next, and is 2000 to 3000 feet thick, and contains a few subordinate seams of coal usually unprofitable to work. The Pennant is said to contain much water, though this is not always the case, and below the Pennant little water is met with. The Lower Coal series follows, and is in two divisions:—1. The New Rock series, 1600ft. thick; mostly sandstone strata, with eighteen workable seams, together equal to 54ft. of coal, usually of household quality. 2. The Vobster series, 1200ft. thick, is largely made up of tender shales, with eight seams of coal, yielding 28ft. of coal, which is usually very fiery. These coals contain little sulphur, and are good for coking and foundry use. This series is very much crushed and disturbed, probably due to the upheaval of the great anticline of the Mendip Range. At one part of the field a remarkable overthrow of the strata occurs, which has not only forced the strata into a vertical position, but has even thrown them right over, thus reversing the dip and bringing the underlying beds uppermost. The author then points out the possibility of coal basins being found under the recent formations on the south of the great anticline of the Mendips, from Frome towards Calais, and so into France, Belgium, and Germany; and he mentions the coal struck in Kent, by a bore near the Channel Tunnel heading, at a depth of 1180ft., where a good bituminous seam of clean bright coal, 3ft. 6in. thick, was found.

The Principal Faults.—Perhaps of all the districts in England this is the most faulted, being comparable in this respect with the coalfields of France and Belgium. The Mendip upheaval is the probable cause of these dislocations, and the greater number of them are parallel to the Mendip axis, and the majority are downthrows to the north. These faults do not affect the overlying secondary rocks, thus proving that they occurred before these recent formations were deposited. From a list of forty faults, ranging in size from 8 fms. to 100 fms., the most striking are described. The most interesting of these is the Radstock overlap fault, which, as its name indicates, forms one of these rare, but in this case well proved,

instances of horizontal thrust. The amount of overlap is 120 yards in the uppermost seam, and increases to 330 yards in the lowest one.

Fossils contained in the Coal Measures.—The coalfield is probably one of the richest in England, both in the number of species it contains, and their excellent state of preservation. A list of the principal species is then given in support of this statement.

Methods of Working.—The method of working the Radstock series is in every case longwall, or some modification of longwall adapted to suit the varying dip. The best results as regards size and yield of coal are got with a continuous straight or curved face. There are two hewers to each road, and they work 20 yards on each side of their gate in level seams, and 30 yards to the rise and 10 yards to the dip in steep seams. The thinness of the seams necessitates a large amount of "blowing" when powder alone is used. Main inclines are formed 6 feet square, and "topples" 5 feet square. All roads have 2-yard packs built on both sides, and all surplus dirt is thrown into the gob, if there is room for it. Compared with the Midland districts, there is little mechanical haulage; what there is is chiefly main rope, or main and tail rope. This is chiefly due to the thinness of the seams, and the consequent expense of making good double roads; the faulty nature of the district, and the inability to concentrate sufficient tonnage at any one point to defray the expense of a haulage installation, though in the newer pits much is being done to overcome these difficulties. The lump coal is dragged round the face in "boards," and the small coal in shallow boxes called "puts." It is then taken by boys or ponies, or is jigged to the main road, where it is hauled by horses to the pit.

In some of the thinner seams enough dirt is produced to fill the gob, and to provide the necessary stone to build the pack walls forming the road-side. In this case one row of props is kept round the face, and as a fresh row is set the back one is withdrawn. Where sufficient dirt is not produced to fill the gob, one or two middle packs are built, and two rows of props are kept round the face, and one in the gob between the packs. In the main horse roads ordinary square timbering is adopted. Many seams have a bad roof, and the main roads require constant repair in such a case. The great extent of face room and horse roads to be kept open, to give a fair output, necessitates a heavy timber cost, even if the roof be good. To get 500 to 600 tons a day, two and a-half miles of fall-room and fifteen miles of road are often required, and, as many of the pits only put out 100 tons, the cost for timber is very heavy. The thin seams necessarily produce a lot of dirt from the holing—which is generally done in the dirt—and in the construction of roads. Seams about 2 feet thick can stow all the dirt produced, but seams of 13 to 16 inches cannot do so, and the surplus has to be sent to the hill, and may amount to one-third or one-fourth of the output.

Ventilation.—The Radstock, Farrington, and New Rock series are entirely free from gas, and are worked with candles. The Vobster series

is very fiery, and is worked with Davy lamps. Generally, the ventilation is produced by means of furnaces, but at some of the fiery collieries fans are in use.

The paper is illustrated with a valuable geological map and numerous sections and plates of the modes of working.

A. D. B.

Minutes of Proceedings of the INSTITUTION of CIVIL ENGINEERS. Vol. C.

A NEW FORM OF COAL-WASHING MACHINE.

By MAX. EVRARD. P. 475.

(Bulletin de la Société de l'Industrie Minérale. Vol. iii., 1889. p. 317.)

THIS is a modification of the piston-jigger, having an arrangement for scraping the surface and removing the top of the washed layer under treatment. It consists of a sieve-plate 10 feet long by 3½ feet in width, the apertures being largest next the feed end—fixed on a pyramidal hutch, having a plunger box attached to one of the long slides, and an opening variable by adjustable slides for the discharge of the heavier waste on the other. The piston is a circular wooden dish moved by an eccentric and communicating motion to the water in the hutch through a cushion of air confined above the water in the piston box. The scraper is a harrow-like frame suspended by a system of jointed rods above the sieve-plate, and receives motion from a cam acting upon the counterpoised arm of an angle lever, which gives a slow forward and quick return motion. The frame is connected with a slide opening the feeding-hopper so as to allow a fresh portion of material to be dropped upon the plate at the coarse end, at the commencement of each stroke, where it is subjected to the most energetic action of the water, while the finer portions of previous charges brought to the surface are drawn forward by the teeth projecting from the frame, towards the discharge end. Usually the frame is so suspended as to pass clear of the charge on the return stroke. The length of the stroke of the frame is 20 inches, so that the surface of the washed material is broken up six times in its passage over the 10 feet length of plate.

The machines weigh about 6 tons each, and are worked in pairs, each pair requiring a motive power of 4 to 6 H.P., and one man to attend to them ; and the average produce is 15 tons per hour for the two machines.

J. G.

Transactions of the NORTH of ENGLAND INSTITUTE of MINING ENGINEERS. Vol. XXXVIII; pp. 77-169.

COAL MINING IN WARORA, CENTRAL PROVINCES, EAST INDIA.

By CHAS. Z. BUNNING, M.E., F.G.S., A.M.I.C.E., M.I.M.E., &c.

THE Warora Colliery, worked by the Government, lies almost in the centre of India, and forms the terminus of the Wardha Coal State Railway, the distance from Bombay being about 550 miles, and the journey by mail train occupying about thirty hours.

The colliery lies near the northern limit of the Wardha-Pranhita-Godaveri basin, and is known as the Wardha or Canda coalfield, which extends 70 miles along the valley of the Wardha River in a southerly direction, and is of an average breadth of 14 miles, covering an area of about 1600 square miles.

Geological Features.—The coalfield lies in the northern division of the series of rocks known as the Gondwana system, the coal-bearing rocks of India. To the north-west of the field the overlying Deccan trap covers the formation, to the north-west metamorphic rocks are found, and the shales and limestones of the lower Windhyan form a boundary to the south-west. The relation between this and the European system is difficult to define, but the Indian geologists agree that it ranges from the Permian to the upper Jurrassic. It will, therefore, belong to a later geological period than the coal-bearing strata of Europe.

The system is divided by geologists into two great subdivisions, viz., the Upper and Lower Gondwana. The latter contains the coal deposits of the Wardha valley in the group of rocks known as the Barakaro, below which lies the Talchirs, the lowest system of the group, and above lies the Kampthis, the remaining section of the subdivision.

Coal has been proved by borings in the northern portion of the Wardha Pranhita or Godaveri basin, at a moderate depth, 38 feet thick, and of much the same quality as the Warora coal.

Mr Hughes estimates the quantities of coal in the various areas as follow :—

	Actual quantity (tons).	Available amount.	Square miles.
Warora basin, ...	20,000,000	14,000,000	¾
Ghugus basin, ...	90,000,000	45,000,000	3
Wun basin, ...	2,100,000,000	1,500,000,000	80
Between Wun and Papur, ...	105,000,000	50,000,000	11
Between Junara and Chicholi, ..	150,000,000	75,000,000	5 to 6
Sarti and Paoni basins, ...	60,000,000	30,000,000	1
	2,525,000,000	1,714,000,000	101¾

The Wardha-Pranhita-Godaveri coal basins stretch over 11,000 square miles, almost one-third of the total area of the coalfields in India, and constitutes the largest continuous area.

Coal.—The coal seams, three in number, are at present found at a depth varying from 100 to 300 feet, the first of which, or No. 1, does not extend

over the whole area, and towards the dip is hardly what can be called a true coal, consisting as it does of a soft black shale resembling a mudstone more than a coal. About 14 feet below this is found the No. 2 seam, varying from 14 to 17 feet thick, which would be considered by an English miner as shale with thin streaks of coal interspersed, varying from nothing to 1 foot. Underlying this there are 4½ to 7 feet of shaly sandstone, and then the No. 3 seam, about the same average thickness as the No. 2. Beneath the No. 3 seam only thin seams of coal from 3 to 18 inches thick are known to occur.

The coal of the No. 3 seam is similar to that of the No. 2, except that in the former the bands of true coal are still thinner.

An analysis of No. 2 seam by Mr Tween, of Calcutta, gives :—

Fixed carbon,	45·4	per cent.
Combustible volatile matter,	26·5	,,
Water expelled at 212 deg. Fah.,	13·9	,,
Ash,	14·2	,,
	100·0	

Two analyses of the upper portion of the No. 2 seam, one of the dull shaly splint, and the other of the bright or true coal, give :—

	Dull Splint Coal.	Bright Coal.
Fixed carbon,	57·0	48·0
Volatile combustible matter,	28·5	38·0
Ash,	14·5	14·0
	100·0	100·0

Several samples of coal sent to England and crushed in Carr's disintegrator gave on analysis :—

	Average Sample.	After Washing.
Carbon,	42·08	46·91
Volatile matter,	37·85	36·65
Sulphur,	1·87	0·74
Ash,	18·20	15·70
	100·00	100·00

From these results it will be seen that washing removes a large portion of the sulphur, but not of the earthy matter. Numerous experiments have been made to coke the coal both here and in India, but failure has resulted in all cases, nothing but a sandy heap being left. Even when the coal was mixed with 25 per cent, of bituminous coal and coked as before no better results were obtained.

The following analyses were made by Dr. Waddell, the chemical examiner to the Indian Government, of the Nos. 2 and 3 seams, and the dull stony coal of No. 3 seam :—

	No. 2 Seam.	No. 3 Seam.	No. 3 Seam (Stony Coal).
Moisture,	12·24	12·09	7·67
Ash,	10·36	14·18	47·40
Carbon,	47.00	47·972	26·17
Hydrogen,	5·60	3·45	2·63
Nitrogen,	Trace	1·63	Trace
Oxygen,	23·689	19·428	15·63
	98·889	98·750	99·49

Taking the Calorific power of No. 2 seam as 1000, the No. 3 is represented by 903, and the dull stony coal by 498, which shows that No. 2 is the best for commercial purposes—less ash being contained therein.

The author gives other analyses of the Nos. 2 and 3 seams, which show much the same result as those above.

It will be seen from the foregoing analyses of the different coals that the amount of fixed carbon contained is small, so that for the creation of high temperatures and for smelting, the coal is of little value. The percentage of ash is great—no sample giving less than 13 per cent., except in the last case of No. 2 seam, where there was only 10·36 per cent., and it reaches as high as 18. This amount of ash causes some trouble in firing locomotive boilers, rendering it necessary to have large fire-boxes, and bars wide apart, and such is the waste that, when the fires are cleaned, most of the fuel disappears; and when small coal is used, it clinkers very much.

The coal is very friable, and, on exposure to the atmosphere, splits up into small prismatic fragments, but, still clinging together, resembles wood charcoal. It is extremely liable to spontaneous combustion, not so much on account of the iron pyrites contained therein, but owing to its great affinity for oxygen; and it, therefore, requires to be used fresh from the mine. The calorific power of the coal is equal to 7·7 lbs. of water evaporated by 1 lb. of fuel from 212° F.

Fireclay.—Above the No. 2 seam, there is 11¼ft. seam of fireclay, of which the lower 3ft. 9in. is a pure white clay, and pronounced to be equal to the best English clay. It does not form a separate working, but is got when required from the falls and goaf of the "wasted" workings of the No. 2 coal. The demand for the clay is so limited that no special means have been adopted for its working. At present the clay costs one rupee a ton to get, and one rupee to grind—the price realised for it being below that of the English clay at the place where it is required.

Strata.—The following shows the strata passed through in sinking No. 5 Pit:—

	ft.	in.	
Black cotton soil,	4	9	ALLUVIUM.
Clay mixed with kunker,	39	0	
Sandstone, soft,	1	6	KAMPTHIS GROUP.
Do., hard, red,	0	3	
Do., reddish colour, coarse grained,	15	3	
Do., very soft,	2	0	
Do., reddish coloured,	15	3	
Do., white, streaked with iron,	10	4	
Clay,	0	8	
Rotten sandstone,	2	4	
Sandstone, reddish,	13	8	
Do., dark red,	3		
Do., reddish, coarse grained,	11	6	

White quartzose sandstone, rather hard, ...	2	0		BARAKAR GROUP.
Coal seam No. 1, very poor, ...	1	7		
Seggar clay, dark in colour, soft, ...	7	6		
Do., white, harder and better in quality, ..	3	9		
Shale, black mottled, ...	3	2		
Coal, No. 2 seam, ...	17	0		
			154ft. 6in.	
Shale, black, stony, ...	0	6		
Post girdles, ...	1	0		
Hard shale and coal, ...	3	0		
			4ft. 6in.	
Coal, No. 3 seam, ...	16	3		
			175ft. 3in.	
12ft. sump, rest bored.				
Hard white micaceous sandstone, ...	50	0		

None of the beds are hard enough to render shot-firing necessary in sinking through them. A sinking pick with wedges, with only an occasional shot, is all that is required. The No 6 Pit, 100ft. deep, was sunk in three months, and the lower, 76ft., of No. 5, in 2½ months. The former is 15ft. diameter in the clear, with 18in. brickwork walling, and 16in. of concrete backing behind the wall; while the latter is rectangular, 6ft. × 10ft., and strong enough to stand without lining, except for the first 45ft. The sinkers work eight hour shifts, and each man makes during the time from 5 to 6 annas.

The No. 4 Pit, which is sunk to No. 2 seam, cost 31,578 rupees, including head gear and winding engine. The cost of No. 1 Pit, 190ft. deep, inclusive of fitting up engines and boilers, was 65,343 rupees; No. 5 Pit, 187ft., 20,923 rupees; and of No. 6 Pit, including lining, 110ft. deep, as follows:—

	R.	A.	P.
Sinking, 110ft., 15ft. dia. in clear, ...	1482	6	10
Tools, stores, &c., ...	173	4	11
Walling, 70ft. deep, of 18in. brickwork, ...	4419	0	1
Concrete packing, ...	449	11	9
Erecting of sinking engine and boilers, ...	645	0	2
Wrought teak wood, in shape of three walling curbs and 110 props,	1428	2	9
Ironwork, ...	383	15	0
Contingencies—Extra walling, sinking through very soft ground, ..	1035	6	0
	R10,016	15	6

The cost would have been reduced but for the last 30 feet of very soft strata, which required careful sinking and lining. There was no water to contend with or blasting necessary.

Boring.—The bore holes range from 100 to 350 feet, and the cost of the latter was 1612 rupees. The time taken to put it down was 162 days.

Boring by steam on the Canadian principle was tried, the necessary plant costing 8568 rupees. A comparison of the costs by that method and by hand through the same metals is as follows:—

Hand Boring, 1878 (working three shifts per day).

	R.	A.	P.
30 Men per day at crab winch at 4 as., ...	7	8	0
6 Men per day at tillers, at 4 as.,	1	7	0
3 Mates at 10 rupees per month,	1	0	0
3 Watermen at 4 as., ...	0	12	0
2 Chowkidars (men in charge tools), ...	0	7	0
Total cost per day, ..	11	15	0

Steam Boring, 1886 (1 shift of 12 hours).

	R.	A.	P.
4 Boring coolies at 5 as., ...	1	4	0
1 Boy at 3 as., ...	0	3	0
1 Waterman at 4 as., . ..	0	4	0
1 Engineman at 5 as., ...	0	5	0
2 Stokers at 5 as., ...	0	10	0
2 Chowkidars, 3½ as., ...	0	7	0
Labour, ...	3	1	0
Stores—1 ton of coal, ...	3	9	0
2 lbs. castor oil, ...	0	4	0
½ lb. tallow,..	0	1	10
1 lb. cotton waste, ..	0	2	2
	7	2	9
Sharpening tools, ...	0	8	0
	7	10	9

A bore put down by hand a depth of 300 feet cost 675 rupees, against the same depth by steam for 405 rupees, or only 1 rupee 5 annas 7·4 pies per foot, the difference being very much in favour of the latter, while the time occupied was 26 per cent. less.

Underground Fires.—The Warora coals contain no fire damp, but are particularly liable to spontaneous combustion. During the time that the field has been opened out a number of outbreaks of fire have occurred, causing a serious loss of coal which had been left in pillars, the cause of which can only be traced to the packing of the longwall goaves with small coal, and to a want of ventilation.

The chief means used for checking the fire has been by cutting off the air by building in stoppings of brick and lime or basalt stone stoppings, the latter being preferable on account of the poor quality of brick. Flooding was resorted to, but owing to the fire area being to the rise of the pit, and there being no escape for the air, it was ineffectual.

The gas given off by the active fire area is carbonic acid, while carbonic oxide is proved to come out of those parts where a heating of the mass takes place, by the men succumbing to it and the lamps continuing to burn. Exclusive of the loss of coal, the annual cost to keep the fires within bounds since 1882 has been from £500 to £1000.

The author gives a long description of the winding, pumping, ventilation fittings, and the other plant for conveying the minerals above ground at these collieries, and thereafter states that the winning and raising of the coal is carried on in all its branches by a number of contractors, who provide all labour and oil, but are supplied with tools and explosives. The Government looks after the underground management by an efficient staff of European and native officials. But as these contractors are in a chronic state of bankruptcy, the consequence is that the work is kept back. It is now under the consideration of the Government whether it would be better or not to let the whole work under contract to one man.

It is stated that prior to the year 1883 the method on which the seams were worked was by the "bord and pillar" system, having pillars 20 feet square and places 12 feet wide, and of the same height. This resulted in a general collapse of the roof. Longwall was also tried, but given up, and it is in the waste of this working that it is believed the fire originated. Subsequent to the above year the pillars have been increased to 45 feet square, with 12 feet bords and 7 feet headways; and in 1886 the pillars were cut 60 feet square, leaving the bords and headways as before. The broken has as yet been only worked in the top or No. 2 seam, and is worked in lifts off jenkins—a jenkin being a split through the pillar.

The working of the seam, which is from 15 to 16 feet thick, is conducted as follows:—All the coal is worked in the bottom portion of the seam, and at first all levels and galleries are driven in the thill of the seam, 5 feet high, and in the slack season of the year—viz., from May to October—no top coal is touched, but saved for the busy season. when 3 feet of the top coal is taken down in the roads, increasing the height to 8 feet, leaving 7 to 8 feet still unworked. This coal in the roof is not touched until the broken is worked, when from 3 to 4 feet more is dropped, leaving about one-third of the seam unworked. This is necessary because of the soft nature of the roof of the seam, which often runs into a soft clayey sand, and if coming in would swamp the workings.

At present they are opening out new ground on the panel system, and to guard against underground fire the panels, containing an area of 4½ acres, are surrounded on three sides by a 60 feet barrier of solid coal, the barrier on the remaining side having seven openings, which can be walled off in case of fire. The area of 4½ acres is, from the experience got, about the extent of what can be worked before fire can appear in the waste.

The following table shews the percentage of coal got out and lost:—

Size of Pillars.	Thickness of Seam in Feet.	Coal Lost as Top Coal. % Cent.	Coal Worked in the Whole Mine. % Cent. on Total Thickness (15 ft.)	Coal Worked in the Broken Mine. % Cent. on Total Thickness (of 15 ft.)	Waste Allowed in Working the Broken. % Cent.	Total Amount.		
						Won % Cent.	Lost % Cent.	Total.
20 Feet Square,	15	33·3	(1) 41	Nil.	—	41	59	100
45 " "	15	33·3	(2) 22	33	25	55	45	100
60 " "	15	33·3	(3) 16½	42	15	58½	41½	100

(1) 61 per cent. of the workable or lower 10 ft. of the seam is worked in the whole mine.
(2) 33 " " " "
(3) 25 " " " "

By increasing the size of the pillars, the waste has decreased from 59 to 41½ per cent., and may still be reduced.

It is considered that the working of these seams by the longwall method is impracticable, owing to their liability to fire. Mr Ness, who acted as mining engineer, introduced it, but abandoned it immediately after, and fire, said to be due to spontaneous combustion, has since broken out.

The timber used in the working is of various kinds, and is divided into three classes, as follows :—

Class.	Length.	Average Diameter at Thick End.	Number Ordered. 1887-88.	Average Cubic Contents. per Prop.	Price per Prop.	All round Rate agreed upon in 1877.
				Cub. Ft.	R. A. P.	
I.	8 to 9 ft.	8 in.	800	2·695	1 10 0	£3 per Prop.
II.	10 to 12 ft.	10 in.	5350	4·792	2 14 0	
III.	13 to 14 ft.	12 in.	1350	7·006	4 4 0	
			7500			

The output has increased year by year since the commencement of the collieries. In 1876 it was 10,700 tons, and in 1888, 134,236 tons—the total output between these years being over 935,000 tons.

The price paid by the consumers depends upon the quantity used. Those customers taking 5000 tons or less per annum were charged 7s 4d per ton for large coal and 4s 8d for small. When the quantity is over 5000, large coal is charged 6s, and small 4s per ton.

The average cost of raising the coal for the year ending 31st March, 1888, was 4s 9½d per ton.

The capital invested in the colliery is about £74.000, and the whole profit realised since the commencement in 1871 is £21,942, or about 1¾ per cent. per annum.

Under the head of cost of working, a number of tables are given shewing the cost in detail for two and a half years for the cutting and raising of coal by contractors; and, in conclusion, the author observes that the coal is not a first-class one, but as the cost is only about ⅛ of English coal, it is worth working. It has at present no competition, and the price to large consumers is very moderate, compared to the cost of raising it.

A. L.

Proceedings of the MIDLAND INSTITUTE of ENGINEERS. Vol. I.

OVERWINDING AND ITS PREVENTION.

PAGES 19 to 27 are occupied by two papers on "Overwinding and its Prevention"—the first by Mr Bertram, and the other by Mr Cobbold. Each describes apparatus patented by the several authors—apparatus which

act on the same principle of shutting off steam and applying the steam brake to the drum, if the engine is running at a speed higher than is fixed upon as safe at a given point in each wind. If the speed of the engine is not greater than is allowed for in the apparatus at the point fixed for its coming into action, it is not interfered with at all, so that speed of winding is not affected. In both inventions the ordinary governor is used, and the difference lies in the mechanism through which it controls the steam valve and brake. By tappets in the shaft, with which the cage comes in contact, a slow overwind or creeping of the engines is prevented.

J. H.

Proceedings of the MIDLAND INSTITUTE of ENGINEERS. Vol. I.

NOTES ON THE MEDIUM FAN.

By ARNOLD LUPTON. Page 29.

THE name, "Medium Fan," appears to have been selected by the inventor because it is neither large nor small, fast nor slow running. In its main features, it is a Waddle fan with a roughly spiral casing, and a chimney which is equal in breadth to half the diameter of the fan, and which is intended to have a similar effect as the *evasée* outlet of the Guibal fan. From results obtained from a fan in use, it is claimed that an average useful effect of 73 per cent. can be got, and an average water gauge equal to 59 per cent. of the theoretical. J. H.

Transactions of the AMERICAN INSTITUTE of MINING ENGINEERS. February, 1890.

NOTE ON THE FRICTION OF MINE CAR WHEELS.

By R. VAN NORRIS.

WITH the object of testing the friction of certain styles of wheels, experiments were instituted by the Susquehanna Coal Company. The wheels tested were all loose on the axles, while the axles also were free to revolve, though they were not expected to do so, nor were they lubricated. The old style of wheels required oiling every trip, and the new style were fitted with closed oil chamber over the end of the axle, communicating with the journal by spiral channels or ports, and only required oiling once in two months. Tests were made on the starting and running friction of each style of wheel on single cars and trains, empty and loaded. The details of results are tabulated, and show a difference of nearly 40 per cent. in favour of the new style of wheel. J. H.

Minutes of Proceedings of the INSTITUTION of CVIL EGININEERS, Vol. CIII.

ON MACHINE VENTILATION IN DRIVING LEVELS AT DUDWEILER.

By G. ENGELEKE. P. 466.

IN the Dudweiler Mines, near Saarbrücken, ventilation of narrow drifts by fans placed in the intake air courses and driven by compressed air engines have been largely used. The earlier fan in use was about 20 inches in diameter, with slightly curved radial blades, on a central disc, fitted with a cone fronting the ear or axial inlet on each side. The fan is driven by a belt from the engine shaft, and the engine exhausts into the blowing tubes leading to the face of the drift being ventilated. The stroke of the engine is only four inches, and it makes from 450 to 950 revolutions per minute, giving a water gauge of from 0·4 inch to 2·67 inches, and a ventilating current of from 1580 to 4400 cubic feet per minute at these velocities. The cost of each fan is about £56.

A later and now more extensively used fan has eight trapeziform blades 5½ inches broad, set a little out of the radial position on a slightly dished disc, about 27½ inches diam., also fitted with cones facing the inlets. The engine in this case drives direct, and has a stroke of only 2 inches. With these fans at a velocity of 500 revolutions per minute, under the most favourable conditions as to bends, &c., it is possible to supply 200 cubic feet per minute at a distance of 300 yards. The cost of these fans is £29 5s each. The ventilating tubes are of zinc, 10½ inches (?) in diameter, with a socket at one end of each length. The joints are made air tight with a mixture of 5 parts of cement, 6 of tar, and 6 of coal dust, and the few lengths nearest the face are loose for removal in blasting. The high velocity at which the air is delivered at the face—the current being perceptible at 8 yards from the end of the tube—renders it very efficient in clearing away gas as it is given off, and reduces the temperature from 8 to 10 degrees at the face.

For comparison of cost the following is given as the outlay in various sections of the mine on lengths of 220 yards of main drift :—

Ventilation by parallel drifts and stoppings, ...	£168	0	0
Ventilation by brick brattice in the drifts, ...	41	10	0
Ventilation by a free standing channel, walled on three sides, as required in ground subject to great pressure, ... Ventilation by fans and pipes, ...	78	2	0

The working of the three compressors—one of 70 H.P. and two of 40 H.P.—in 1888 for 8784 hours was £2389 16s. The net discharge of the three compressors is 7995 cubic feet per hour, and the cost per 1000 cubic feet at four atmospheres pressure is 8·161 pence. J. H.

Minutes of Proceedings of the INSTITUTION of CIVIL ENGINEERS, Vol. CIII.

KINDER ON RAILWAYS AND COLLIERIES OF NORTH CHINA.
P. 278.

WESTERN ideas and inventions make slow progress in the Celestial Empire, and railway communication very gradually asserts its superiority. One of the first railways constructed in 1876 was torn up in the following year. In 1878 a diamond bore was put down in search of coal, which was proved to exist; and sinking was commenced on a site determined by convenience of transport to the market rather than by mining or geological consideration. The projected railway to the colliery was stopped by Imperial edict almost before it was begun, and a canal, as being less repugnant to Chinese ideas, was substituted for the greater part of the distance. A light tramway, where haulage was done by mules, completed connection with the mines. Before the tramway had been finished a locomotive had been secretly built at the works and finally was allowed to run after having been seen by officials and found not such a terrible monster after all. Traction by mules was abandoned, and the stabling demolished. Later, the canal also was abandoned and a railway took its place. The coal bearing strata at the colliery is about 800ft. thick, and contains thirteen seams, of which nine are worked, having a total thickness of 125ft. Only two seams, one 30 inches and the other 70 inches thick, are of good quality. The seams are inclined at an angle of 45 to 60 degrees. The working is conducted after the Belgian system—working to the rise and stowing the waste with material sent down from the surface. There is heavy pumping plant on the surface, and three steam pumps underground. The latter, it is proposed to replace by electric pumps, and to apply electricity to hauling as well. The cost of production is about five shillings a ton, and the selling price varies from six shillings to twenty shillings a ton, according to quality of coal. In 1881 the output was 3613 tons, and in 1889 it had risen to 247,000 tons.

Brick works and potteries have been established in competition with native industry, and are able to compete successfully by the use of steam power and with the advantage of a more favourable site. The fireclay used is of excellent quality—the finest being equal to Stourbridge. Red bricks cost about thirteen shillings a thousand, and compressed fire-bricks about double. A Chinese brick moulder can make about 400 bricks per day, and for this he is paid from 5d to 6d. The average daily wage of a miner employed by the shift is 7d, but men working on the "butty" system earn twice that amount. Unskilled labour is cheaper, but skilled labour is dearer than in Europe.

Progress has so far been slow, and is likely to continue to be very gradual because of official opposition, and because of the hardship entailed at first to workers who, though they would ultimately benefit by railway development, have no assurance of this, and in any event cannot wait for it. The

bulk of the population is therefore amenable to the influence of interested persons who wish to raise opposition. This is Northern China, and it is believed that for various causes these and other hindrances render railway prospects in Southern China even more gloomy and uncertain. J. H.

Minutes of Proceedings of the INSTITUTION of CIVIL ENGINEERS, Vol. CIV.

SHAFT SURVEYING AT THE PRZIBRAM MINES.

P. 327.

At the Przibram Mines two shafts—the Adalbert and the Maria—had in 1879, been sunk to the thirtieth level at a depth of upwards of 3,200 feet, and it was proposed to deepen the Kaiser Franz Josef shaft from the seventeenth level to the horizon of the other two, a total distance of 1864 feet. To expedite the work, the driving of the shaft was begun by sinking from the seventeenth level, and rising from the twenty-third, and similarly in succession between the twenty-third and twenty-fifth, twenty-fifth and twenty-eighth, and twenty-eighth and thirtieth levels. The relative positions of the three shafts was first determined by a survey at the twelfth level with a mining theodolite, with two verniers reading to one minute. The total length of this survey was 3673 feet, with forty-four stations, and the traverse gave the sides and angles of the triangle formed by the three shafts at

Sides of Triangle.	Metres.	Angles opposite.	
a. Maria-Adalbert	=561·091.	*A.* At Franz,	90° 34′ 58″
b. Maria-Franz,	340·091.	*B.* At Adalbert,	37° 18′ 28″
c. Adalbert-Franz,	442·828.	*C.* At Maria,	52° 6′ 34″

The survey was repeated after a connection had been effected in each of the sections, the total distance surveyed being eleven miles, with 684 stations. The operation was completely successful, as the shaft was formed full size (19¾ ft. by 6½ ft.), and no alteration was found necessary in timbering or masonry in any section when a holing was made. J. H.

Minutes of Proceedings of the INSTITUTION of CIVIL ENGINEERS, Vol. CIV.

ON THE EFFECT OF PRESERVATIVE AGENTS ON MINE TIMBER.

(Comptes-Rendus Mensuels de la Société d l'Industrie Minerale, November, 1890. P. 223.) P. 394.

EXPERIMENTS have been conducted since 1879 at Saint-Eloy in Anvergne on the effect of certain antiseptic agents in preventing decay of pitwood.

Seven different timbers were tested, viz. :—Oak (two specimens, Nos. 1 and 2), fir, pine, birch, beech, and poplar. The method adopted was to take a stem of each kind of wood and cut into fifty-two discs, each ¼in. thick. Two discs of each (the first and last from the stem) were kept in their natural condition above ground secured from damp; the others were suspended in a kind of cage in a damp level underground, where the prevailing temperature was 75° fahrenheit. Of those put underground, two specimens in every ten were in their natural condition. The others were treated with solutions of 1 sulphate of iron, 2 sulphate of copper, 3 chloride of zinc, of strength varying from 100 to 450 grains of the salt to 1 litre of water, or from about 1lb. to 4½lbs. to a gallon of water, 4 creosote of the impure commercial kind, the time of immersion being from one hour to four days in each of the foregoing agents.

Five painted with three coats of the following oil colours :—Pure white lead, white lead and yellow ochre, white lead and emerald green, red lead, white lead and lamp black, white lead and Prussian blue.

Six tar, mineral and vegetable ; immersion for five minutes.

After treatment the specimens were all kept for fifty days on the surface before being exposed underground. During exposure they were periodically examined—five times in eight and a half years. The untreated specimens were all destroyed in from two and a half to three and a half years, the observed order of durability being :—beech, oak (No. 1), poplar, oak (No. 2), birch, fir, pine.

"The preservative effects of the different substances employed is given in the following table, which represents the increase in the duration of the protected specimens in terms of that of the unprotected ones, the latter being taken as unity."

	Oak No. 1.	Oak No. 2.	Fir.	Pine.	Beech.	Birch.	Poplar.
Tar, ...	28·7	24·6	263·5	87·5	105·4	26·2	150·5
Chloride of Zinc, ...	10·5	9·2	50·0	26·3	18·6	52·5	34·7
Oil Paint.	6·1	10·2	31·7	54·5	25·0	12·1	2·5
Sulphate of Copper, ...	42·1	26·4	12·0	8 0	1 8	2 5	15·5
Sulphate of Iron,.....	18·0	12·5	12·1	4·2	4·7	3·5	2·9
Creosote,.....	1·7	0·9	2·5	4·4	0 6	3·3	1 3

J. H.

Minutes of Proceedings of the INSTITUTION of CIVIL ENGINEERS, Vol. CIII.

ON A CAPELL FAN AT BERGE-BORBECK.

By M. KATTWINKEL. P. 468.

THE Prosper I. mine in Westphalia employs about one thousand miners. Ventilation was produced by a Guibal fan 39ft. in diameter, the maximum capacity of which was found to be 76,000 cubic feet per minute, with a 3·2in.

water gauge. This was inadequate, and a Capell fan, 12·3ft. in diameter and 6·9ft. broad was substituted. This fan, after a few months' working, shows what are quite justly described as "astonishing results." The fan engines are coupled ; and the cylinders are 20½in. diameter with 31½in. stroke. The fan is driven by a camel-hair belt 25·6in. broad, and makes four revolutions to one of the engine.

Special trials were made of the fan at 72 revolutions of the engine—228 of the fan—per minute, and at the maximum speed attainable. At the former speed, with a water gauge of 7·3in., 80,000 cubic feet of air per minute was got in the underground air-course, and 105,000 cubic feet in the fan drift at the surface. Comparing those results with the Guibal fan, according to the relative water gauges the Capell fan ought to have given 114,000 cubic feet per minute in place of 105,000, and yet it is claimed for the latter that the power expended in the steam cylinders compared with the work done in moving air current—"the useful effect of the fan"—is 52·039 per cent., or 5 per cent. higher than the best of the fans reported upon by the Prussian Fire-damp Commission. It is also said that the duty thus brought out is "7·5 times as large" as that of the 39ft. Guibal fan which the Capell fan superseded, but there is clearly some error here.

At speeds of 80 and 87·5 revolutions of the engines, the inferred effective work of the fan is 51 and 53 per cent. respectively.—*Inferred* useful effect because the quantity of air was not actually measured but calculated from the speed and observed water gauge.

Lubrication of the fan axles is effected by kidney fat broken small in the oil boxes with a continuous stream of water falling on it. With this lubricant not the slightest heating of the journals was observed, whereas experience with oil and tallow was not nearly so satisfactory. J. H.

Minutes of Proceedings of the INSTITUTION of CIVIL ENGINEERS, Vol. C.

THE SLIDING RAILWAY.

By C. Barre. P. 440.

(Mémoires de la Société des Ingénieurs Civils, Jan., 1890. P. 33.)

The sliding railway is based upon two principles, sliding and hydraulic propulsion. The vehicles are supported by rectangular slides resting on rails of the same width. At the outer side of each rail a smaller rail of U section is laid to guide the slides and keep them on the rails. During the motion of the train the slides and rails are separated by a film of water, which is forced between them under pressure, and the friction resistance is thus reduced to an amount not exceeding 2·2 lbs. per ton. A conduit

extends over the whole length of the line charged with water at, say 10 atmospheres pressure ; and placed at intervals on this pipe are adjutages or nozzles—opened by the first vehicle, and closed by the last—which discharge horizontal jets of water upon a rectilineal turbine running under the carriages from end to end of the train, which is thus forced along.

The carriages are light compared with ordinary wheeled vehicles, and there is no weight corresponding to locomotive and tender.

A description is given of the short sliding railway laid down at the Invalides in connection with the Paris Exhibition of 1889, which was worked at a speed of 18 miles per hour ; and it is considered that by this system speeds of 100 to 120 miles per hour can be attained. J. G.

Minutes of Proceedings of the INSTITUTION of CIVIL ENGINEERS, Vol. C.

THE BÜRGENSTOCK WIRE-ROPE RAILWAY.

By A. SOMMERGUTH. P. 434.

(Zeitschrift des Vereines deutscher Ingenieure, 1890, p. 61.)

THIS is a mountain line from the Lake of Lucerne to the summit of the Bürgenstock. It was originally intended to work it by water-balance, but owing partly to the expense of getting the necessary quantity of water to the summit, and partly to the extra load, and therefore wear and tear of the ropes, this was abandoned, and the line is worked by electricity, the dynamos being driven by turbines on a stream about 2½ miles distant.

The line is single and constructed to the metre gauge, and is 904 yards in horizontal length, with a rise of 1,444 feet, giving a mean gradient of 1 in 1.88.

The rails are laid on angle-bar sleepers firmly secured in cement masonry. The safety brake gears in double plate rack-rails, which are fixed to the sleepers by angle bars with a clear intermediate space of 1·1 inch. The tee-section space thus obtained is utilized for anchoring down the carriage framing by a rod with head running in the groove, so that the vehicle cannot be lifted off the rails. The grooved rope rollers are 6¼ inches in diameter, and spaced 49 feet apart.

The rope is of steel 1·18 inch in diameter, the wires of which are tested to 89 tons per square inch. The carriage accommodates 30 persons and weighs 6 tons when loaded. The wheels are grooved or double flanged on one side of the carriage, and without flanges on the other side, so as to cross over the rack-rail and rope at the passing place. The average speed is 2¼ miles per hour.

The volume of water is 40,000 gallons per minute, with a fall of 16½

feet. The turbines make 49½ revolutions per minute, and gear to two Thury's dynamos running at 800 revolutions The motors at the Bürgenstock Station make 700 revolutions, and the winding drum, 13 feet in diameter, 5 turns per minute. J. G.

Minutes of Proceedings of the INSTITUTION of CIVIL ENGINEERS, Vol. C.

ON THE RESISTANCE OF ROPES TO BENDING STRESS.

By L. DE LONGAIRE. P. 428.

(Mémoires de la Société des Ingénieurs Civils, Oct. 1889, p. 460.)

THE author calls attention to the internal wear of hemp ropes, which are reduced internally to a sort of powder. In the case of a hemp-rope used at the Exhibition of 1878 to restrain a captive balloon, and which was wound on a drum of large diameter, and passed over a pulley 1 metre radius, the inner portion was found to have been reduced to powder, the result of the friction of the strands on each other. A new rope with a well-greased core being substituted, the internal wear ceased. In wire ropes the wear of the interior wires is very little. He gives an empirical rule relative to hemp and iron wire ropes, viz. :—that they may be loaded with 1000 times their weight per lineal metre.

The following formulæ reduced to English measures are given : S = the resistance of bending in lbs ; D = the diameter of barrel in feet ; P = the weight of the rope in lbs. per lineal foot ; T = the tensional resistance in the rope at the approaching side, in lbs.

Hemp, ... $S = 0{\cdot}0328\ T\frac{P}{D}$

Iron Wire-rope. ... . $S = 3{\cdot}61 + 0{\cdot}00262\ T\frac{P}{D}$

Steel Wire-rope, ... $S = 6{\cdot}314 + 0{\cdot}00262\ T\frac{P}{D}$

Do. rusty, ... $S = 5{\cdot}412 + 0\ 00262\ T\frac{P}{D}$

Do. lubricated by immersion in an oil bath, $S = 3{\cdot}428 + 0{\cdot}00172\ T\frac{P}{D}$

J. G.

Transactions of the AMERICAN INSTITUTE of MINING ENGINEERS, February, 1890.

THE VELOCITY OF BODIES OF DIFFERENT SPECIFIC GRAVITY FALLING IN WATER.

By R. H. RICHARDS and A. E. WOODWARD.

QUOTING from Rittinger, a table of velocities is given for auriferous silver, galena, pyrites, quartz, and coal, of various sizes, falling in water. By using a formula from the same source, velocity curves have been calculated for bodies of different specific gravities, and in particles of various sizes. These curves have been constructed to facilitate the construction of sieve scales for assorting minerals before jigging. J. H.

Transactions of the AMERICAN INSTITUTE of MINING ENGINEERS, February, 1890.

ELECTRICITY AND HAULAGE.

By F. A. POCOCK.

AN electric locomotive haulage plant, fitted up in the workings of Erie Colliery, is described in detail, with the conditions of working, and the results. A comparative estimate of first cost and working expenses for doing the same amount of hauling by mules, tail-rope, and electric locomotive, brings out the first cost of electricity thus applied at much higher than the other two, but the working expenses are less.

J. H.

Minutes of Proceedings of the INSTITUTION of CIVIL ENGINEERS, Vol. XCIX.

TESTING THE ATMOSPHERE OF MINES AT KOLSCHEID, near Aachen

By —— KAETHER. P. 493.

(Zeitschrift für das Berg. Hütten-und Salinen-Wesen, 1889, p. 116.)

IN the ventilating shaft a gasometer is placed arranged to fill in twelve hours, so that an average sample of the mine air is obtained. This is tested by means of Coquillon's "Grisometer." The free carbonic acid is absorbed by sodium hydrate, the resulting diminution of bulk indicating its percentage in the air. The CH_4 is then decomposed by platinum wire heated to redness by means of an electric current, and the carbonic acid again absorbed by sodium hydrate, and from this second diminution of volume the quantity of fire damp is estimated. It is stated that this instrument gives results in fair accordance with the more exact analysis made by Winkler's method. J. G.

Minutes of Proceedings of the INSTITUTION of CIVIL ENGINEERS.
Vol. XCIX.

REPORT UPON QUESTIONS RELATING TO THE EMPLOYMENT OF EXPLOSIVES IN PRESENCE OF FIRE-DAMP. P. 502.

(Annales des mines, vol. xiv., 1888, pp. 197-376.)

THIS is a report by a special sub-commission appointed by the French Government to determine the behaviour of the different explosives capable of use in mines in the presence of fire-damp.

The conclusions are as follows :—

1. Even explosives under water can inflame fire-damp mixtures with air by means of the dust of the mine.

2. The greater number of known explosives are capable of igniting fire-damp mixtures when exploded freely in the atmosphere. Amongst these explosives are dynamite, gun-cotton (either military or mining, particularly the latter), gelatine dynamite, and Paulille's ammonia dynamite.

3. It is, however, possible to find explosives which detonate at a temperature sufficiently low to avoid inflammation with fire-damp mixtures, at least in the great majority of cases, when freely exploded in the atmosphere. Among the explosives experimented on which approximately fulfil this condition are :—(1) The intimate mixture of 50 parts dynamite with 50 parts of crystallized carbonate of soda, or sulphate of soda, with 10 eqs. water of crystallization, ammonia alum, and ammonium chloride; (2) Moulin-Blanc pyroselin powder ; (3) mixture of 20 parts dynamite, at 75 per 100, and 80 parts of nitrate of ammonia ; (4) mixture of 20 parts of gun-cotton titrating 173 c.c. nitrogen dioxide and 80 parts nitrate of ammonia ; (5) Bellite, of which the composition is not known with certainty, and the experiments have not been sufficiently numerous ; (6) Favier's explosive containing 90 parts of nitrate of ammonia, 10 parts mononitro-napthaline, which appears to equal Bellite in security. It requires, however, further experiment.

4. Because of the complexity and variability of the phenomena occurring during the detonation of explosives free to air, it will be prudent to avoid firing shots in the mine, even with charges considered the safest, at points where the mixture of air and fire-damp is inflammable. The choice of explosives must be considered as diminishing danger, but not as absolutely suppressing it.

5. It is necessary to employ the explosives under conditions such as to develop from them the maximum useful work. Economy and security are in accordance to recommend this rule. To accomplish this the following conditions are necessary :—The explosive must be rammed with care, and the hole must be sufficiently deep. No void space must be left either in front, behind, or round the cartridge. The Bickford fuse must not be placed in contact with the explosive if it is used, and the dangers of the fuze are sufficiently great to make it desirable to replace it by some more certain mode of ignition.

Transactions of the AMERICAN INSTITUTE of MINING ENG
February 1890.

THE VELOCITY OF BODIES OF DIFFERENT SPECIFIC G FALLING IN WATER.

By R. H. RICHARDS and A. E. WOODWARD

Quoting from Dubuisson a table of velocities is given for s silver, galena, pyrites, quartz and coal of various sizes, falling By using a formula from the same source, velocity curves h constructed for bodies of different specific gravities, and in va various sizes. These curves have been constructed to facilit construction of screw scales for assorting minerals before jigging

---

Transactions of the AMERICAN INSTITUTE of MINING EN
February, 1890.

ELECTRICITY AND HAULAGE

By F. A. PEACOCK.

An electric locomotive haulage plant fitted up in the workings Colliery is described in detail with the conditions of working results. A comparative estimate of first cost and working co doing the same amount of hauling by mules, tail-rope and locomotive, being met the first cost of electricity thus applied higher than the other two, but the working expenses are less.

Minutes of Proceedings of the INSTITUTION of CIVIL EN
Vol. XCIX.

TESTING THE ATMOSPHERE OF MINES AT KOLSCHEID, PR

By —— KARTHER. P. 493.

Zeitschrift für das Berg. Hütten-und Salinen-Wesen,

In the ventilating shaft a gasometer is placed arranged hours, so that an average sample of the mine air is tested by means of Coquillon's "Grisometer." The free absorbed by sodium hydrate, the resulting diminution its percentage in the air. The CH_4 is then decomposed heated to redness by means of an electric current, and again absorbed by sodium hydrate, and from volume the quantity of the [illegible] instrument [illegible] made by [illegible]

ON QUESTIONS RELATING TO THE EXPLOSIVE EXPLOSIVES IN PRESENCE OF FIRE-DAMP.

(Annales des mines, vol. xiv., 1888, pp. 197-214.)

report by a special sub-commission appointed by the French to determine the behaviour of the different explosives capable use in the presence of fire-damp.

sions are as follows :—

explosives under water can inflame fire-damp mixtures with air the dust of the mine.

ter number of known explosives are capable of igniting fire-as when exploded freely in the atmosphere. Amongst these n dynamite, gun-cotton (either military or mining), gelatine ler), gelatine dynamite, and Paulin's ammonia dynamite. wever, possible to find explosives which detonate at a temperu-ily low to avoid inflammation with fire-damp mixtures, at least majority of cases, when freely exploded in the atmosphere. explosives experimented on which approximately fulfil this :—(1) The intimate mixture of 50 parts dynamite with 50 tallized carbonate of soda, or sulphate of soda, with 10 eq. tallization, ammoniaalum, and ammonium chloride; (2) Moulin-dlin powder; (3) mixture of 20 parts dynamite, at 75 per 100, of nitrate of ammonia; (4) mixture of 20 parts of gun-cotton 3 c.c. nitrogen dioxide and 80 parts nitrate of ammonia; (5) hich the composition is not known with certainty, and the have not been sufficiently numerous; (6) Favier's explosive O parts of nitrate of ammonia, 10 parts mononitro-napthaline, es to equal Bellite in security. It requires, however, further

of the complexity and variability of the phenomena occurring detonation of explosives free to air, it will be prudent to avoid n the mine, even with charges considered the safest, at points ixture of air and fire-damp is inflammable. The choice of must be considered as diminishing danger, but not as absolutely is.

ssary to employ the explosives under conditions such as t ure them the maximum useful work. Economy and security a ples to recommend this rule. To [illegible] sh this the followi [illegible] (2.—The [illegible] med with care, n [illegible] sufficiently [illegible] t be left either [illegible] or exceed [illegible] fuse must not [illegible] with [illegible] the dangers of [illegible] difficulty [illegible] place it by some [illegible] of igni[illegible]

To the main report is added a supplementary one, dealing more minutely with the conditions of the explosion of fire-damp, and in the conclusions it is stated that the temperature of inflammation of fire-damp is 500° centigrade, but it is necessary that the action of this temperature should be prolonged to produce ignition. Because of this fact, and the almost instantaneous mixture of the products of combustion with the atmospheric air which causes them to cool rapidly, explosives in which the temperature of explosion is less than 2,200° centigrade are capable of inflaming fire-damp mixtures when detonated under nominal conditions. J. G.

Minutes of Proceedings of the INSTITUTION of CIVIL ENGINEERS. Vol. C.

ON BUILDING IN EARTHQUAKE COUNTRIES.

By JOHN MILNE, F.R.S. P. 326.

THIS paper is based on observations made by the author upon buildings which have been shattered or thrown down by earthquakes in Manilla and Japan; and also on experiments, which he has conducted on earthquake motion.

In a former paper, when dealing chiefly with the methods to be adopted in constructing buildings in countries subject to earthquakes, the author came to the conclusion—(1) that the site for a building should be so selected, and it should have such foundations as to receive the least possible quantity of motion; (2) that it should be erected so as to resist best the principal stresses which result from earthquake motion—as these stresses are mostly applied horizontally, archwork is inadmissable. It is undesirable to couple together—unless it can be done rigidly—parts of a building that are not likely to synchronize in their movements. By neglecting this a brick chimney is often destroyed when it passes through a wooden house. Centres of inertia should be kept as low as possible, that is, top weight in roofs and copings should be avoided. The author then goes on to refer to the application of these principles in practice.

Experience teaches that the greatest destruction takes place on low soft ground, while on high, hard soil it is relatively small, and instrumental observation also shows that the most destructive motions occur in soft ground. Wet or marshy ground forms an insecure foundation. Sloping ground is also bad, as the surface soil often slips away, a tendency which is increased with the weight of the building. The upper edges of cliffs and scarps, where the motion of the free face of the cliff is large, are also dangerous, particularly when the strata dip outwards. It was found that the motion at the bottom of a pit 10 feet deep was, in strong earthquakes,

very much smaller than at the surface of the ground, so that great advantage may be gained by giving a building a deep foundation. Another method of minimising the motion received by a building is to give it free foundations. As an example, the author cites a room attached to his own house, which rested upon a layer of ¼ inch cast iron balls. This building stood for many years, and at the time of an earthquake a seismograph inside the house shewed, relatively to one outside, but little motion. The ordinary Japanese house rests loosely on the upper surface of stone boulders, so that it does not receive the whole of the motion imparted by the shaking ground. In buildings with heavy roofs, below the supporting timbers there is usually a multiplicity of joints, which yield and therefore do not communicate the whole motion to the parts above.

Archwork above ground has so often proved the cause of ruin when shaken by an earthquake, that in Italy and in Manilla special rules have been drawn up respecting such structures, and it is now only allowed in cellars.

By the building regulations of some countries it is required that doors and window openings should be vertically above each other, but the author thinks they should not be so arranged. Generally by law doors and windows should be at least a metre and a half (5 feet) distant from the freely vibrating end of a building.

By itself a chimney may stand but when partially attached to a house the house and chimney are mutually destructive because they have different vibrational periods and do not sway together. Stalks should be as short and thick as possible and allowed to pass freely through the roofs, and not loaded with heavy cope stones.

Sometimes the walls of a building are tied together at each floor by transverse and fore-and-aft rods of steel or iron, so as to bind the structure together and cause it to vibrate as a whole—but this is an expensive method.

Great advantage is to be gained by making the upper portion of any structure light, for when the lower part of a building is suddenly moved forward a heavy roof by its inertia tends to remain at rest so that fracture is produced. The material recommended for roofs is iron, zinc, and felt, and ordinary tiles are not permitted. Like chimneys, walls should be light and strong, and not loaded by heavy copings or balustrades, or else they may be fractured by their own inertia. In Manilla masonry walls of ordinary dwellings only reach the first story, the upper flat being of timber.

Balconies and cornices must be of limited dimensions, and the author is of opinion that the former are in any form objectionable.

Buildings should be rectangular in plan, and as nearly as possible square, as they are less subject to destructive stresses than those buildings made up of wings and projecting parts, no two of which can be expected to vibrate in unison.

Joists should extend through the walls, and if possible should cross each other at right angles, and the floor planking be laid diagonally across them ; and heavy ornamentation should be avoided in ceilings.

In the building regulations of Ischia and Norcia, preference is given to the "barrack" system of building, with timber framework well braced together, the spaces between being filled up with hollow bricks or some light material. The timber is hidden with rough-casting. Such a building has the advantage of being cheap, impervious to heat, and safe against earthquakes and fire. J. G.

Minutes of Proceedings of the INSTITUTION of CIVIL ENGINEERS. Vol. XCIX.

THE APPLICATION OF ELECTRICAL TRANSMISSION OF POWER AT BOURGANEUF.

By MARCEL DEPREZ. P. 509.

(Comptes rendus de l'Académie des Sciences, Paris. Vol. cix., 1889, p. 455.)

The authorities of the town of Bourganeuf decided to utilize a waterfall 8¾ miles distant. The fall has a height of 100 feet, and develops 130 horse power in a horizontal turbine running at 150 revolutions per minute.

The generator is a high-tension dynamo of the form known as the Duprez model. The line is double, composed of bare silicon bronze wire 5 millimetres diameter carried on porcelain insulators. The motor is identical with the insulator, and is excited by part of the current from the dynamo used for the illumination of the town. From experiment it was proved that 60 H.P. could be generated at Bourganeuf by an expenditure of 100 H.P. at the falls. J. G.

To avoid fine, this book should be returned on
or before the date last stamped below

Stanford University Libraries
3 6105 013 234 732

Branner Lib.

622.C641
M665
v. 13
1891/92